550K

Engine	550K XLT / 550K LGP
Blade Type	*Power-Angle-Tilt (PAT)*
Manufacturer and Model	John Deere PowerTech™ PWS 4045
Non-Road Emission Standard	EPA Final Tier 4/EU Stage IV
Displacement	4.5L (276 cu. in.)
SAE Net Rated Power	69 kW (92 hp) at 2,200 rpm
Net Peak Torque	420 Nm (310 ft.-lb.) at 1,400 rpm
Aspiration	Turbocharged with charge-air cooler
Air Cleaner	Dual-stage dry tube with tangential unloader
Cooling	
Type	Variable-speed suction fan with optional reversing feature
Engine Coolant Rating	–37 deg. C. (–34 deg. F)
Engine Radiator	10 fins per in.
Powertrain	
Transmission	Automatic, dual-path, hydrostatic drive; load-sensing feature automatically adjusts speed and power to match changing load conditions; each individually controlled track is powered by a variable-displacement piston pump and motor combination; ground-speed selection buttons on single-lever steering and direction control; independently selectable reverse speed ratios of 100% ,115%, or 130% of forward ground speed; decelerator pedal controls ground speed to stop
System Relief Pressure	42 816 kPa (6,210 psi)
Travel Speeds	
Forward and Reverse	8.0 km/h (5.0 mph)
Maximum (optional)	9.7 km/h (6.0 mph)
Steering	Single-lever steering, direction control, and counter-rotation; full power turns and infinitely variable track speeds provide unlimited maneuverability and optimum control; hydrostatic steering eliminates steering clutches and brakes
Final Drives	Triple-reduction final drives mounted independently of track frames and dozer push frames for isolation from shock loads
Total Ratio	52.13 to 1
Drawbar Pull	
Maximum	134 kN (30,000 lb.)
At 1.9 km/h (1.2 mph)	95 kN (21,300 lb.)
At 3.2 km/h (2.0 mph)	59 kN (13,300 lb.)
Brakes	
Service	Hydrostatic (dynamic) braking stops the machine whenever the direction-control lever is moved to neutral or the decelerator is depressed to the detent
Parking	Exclusive spring-applied, hydraulically released park-brake feature engages wet, multiple-disc brakes automatically whenever the engine stops, the operator depresses the decelerator pedal to the brake position, the unit is in neutral for 3 seconds (with detected motion), or the park-lock lever is in the park position; machine cannot be driven with brake applied, minimizing wear-out or need for adjustment

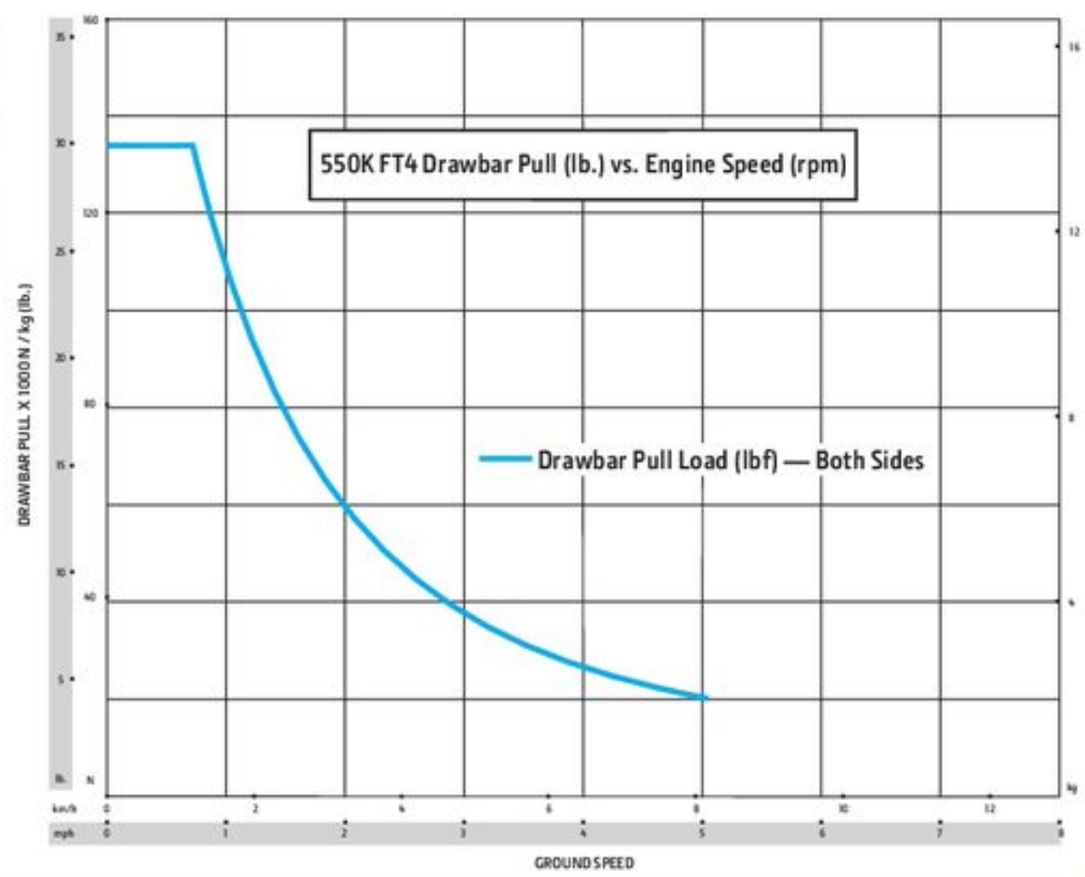

Hydraulics	
Type	Open-center hydraulic system with fixed-displacement gear pump
Pump Displacement	36.4 cc
System Relief Pressure	20 684 kPa (3,000 psi)
Maximum Flow at Unloaded High Idle	80 L/m (21 gpm)
Control	3-function direct-acting T-bar joystick with push-button angle function

Electrical	550K XLT / 550K LGP	
Blade Type	*Power-Angle-Tilt (PAT)*	
Voltage	24 volts	
Capacity		
Battery	950 CCA	
Reserve	190 min.	
Alternator Rating		
Cab	100 amp	
Canopy	100 amp	
Lights	Grille mounted (2), rear mounted (2), and rear reflectors (2)	
Undercarriage	**550K XLT**	**550K LGP**
Blade Type	*PAT*	*PAT*
Tracks	John Deere DuraTrax™ features large deep-heat-treated components; pins and bushings are sealed for life; rollers and idlers are permanently sealed and lubricated; full-length track-frame covers reduce material buildup and ease cleaning	
Track Gauge	1549 mm (61 in.)	1753 mm (69 in.)
Grouser Width	457 mm (18 in.)	610 mm (24 in.)
Chain	Sealed and lubricated	Sealed and lubricated
Shoes, Each Side	42 standard / 39 Maximum Life	42 standard / 39 Maximum Life
Track Rollers, Each Side	7	7
Track Length on Ground	2349 mm (92 in.)	2349 mm (92 in.)
Ground Contact Area	21 479 cm^2 (3,329 sq. in.)	28 639 cm^2 (4,439 sq. in.)
Ground Pressure	39.9 kPa (5.79 psi)	31.5 kPa (4.57 psi)
Track Pitch	160 mm (6.3 in.) standard / 171 mm (6.7 in.) Maximum Life	160 mm (6.3 in.) standard / 171 mm (6.7 in.) Maximum Life
Operator Station	**550K XLT / 550K LGP**	
ROPS (ISO 3471 – 2008) and FOPS (ISO 3449 – 2005)		
Serviceability		
Refill Capacities		
Fuel Tank with Lockable Cap	234 L (61.9 gal.)	
Diesel Exhaust Fluid (DEF) Tank	11.8 L (3.1 gal.)	
Cooling System with Recovery Tank	22.6 L (6.0 gal.)	
Engine Oil with Filter	19 L (20 qt.)	
Transmission/Hydraulic Reservoir with Filter	87.8 L (23.2 gal.)	
Operating Weights	**550K XLT**	**550K LGP**
Blade Type	*PAT*	*PAT*
Base Weight (with standard equipment, rollover protective structure [ROPS], full fuel tank, and 79-kg [175 lb.] operator)	8908 kg (19,640 lb.)	9354 kg (20,622 lb.)
Optional Components		
Cab with Pressurizer and Heater/Air Conditioner	306 kg (675 lb.)	306 kg (675 lb.)
ROPS Canopy		
Heater	39 kg (85 lb.)	39 kg (85 lb.)
Front and Door Screens	81 kg (179 lb.)	81 kg (179 lb.)
Rear Screen	34 kg (76 lb.)	34 kg (76 lb.)
Side Screens	43 kg (94 lb.)	43 kg (94 lb.)
Limb Risers (ROPS canopy and cab)	104 kg (229 lb.)	104 kg (229 lb.)
Counterweight		
Front	109 kg (240 lb.)	109 kg (240 lb.)
Rear	150 kg (330 lb.)	150 kg (330 lb.)
Retrieval Hitch	23 kg (50 lb.)	23 kg (50 lb.)
Drawbar, Extended Rigid	33 kg (72 lb.)	33 kg (72 lb.)
Winch	652 kg (1,437 lb.)	652 kg (1,437 lb.)
Fairlead, 4 Roller	85 kg (187 lb.)	85 kg (187 lb.)
Center Chain Guides	40 kg (88 lb.)	40 kg (88 lb.)
Full-Length Rock Guards	128 kg (282 lb.)	128 kg (282 lb.)
Maximum Life Undercarriage	258 kg (569 lb.)	258 kg (569 lb.)
Track Shoes		
457 mm (18 in.)	In base	—
610 mm (24 in.)	—	In base

Machine Dimensions		550K XLT / 550K LGP
A	Overall Height to Roof	2747 mm (9 ft. 0 in.)
B	Tread Depth with Single-Bar Grouser	49 mm (1.9 in.)
C	Ground Clearance in Dirt	389 mm (15.3 in.)
D	Overall Length	4128 mm (163 in.) (13 ft. 7 in.)
E	Blade Lift Height	772 mm (30.4 in.)
F	Blade Digging Depth	523 mm (20.6 in.)
G	Blade Cutting-Edge Angle, Adjustable	52 to 60 deg.

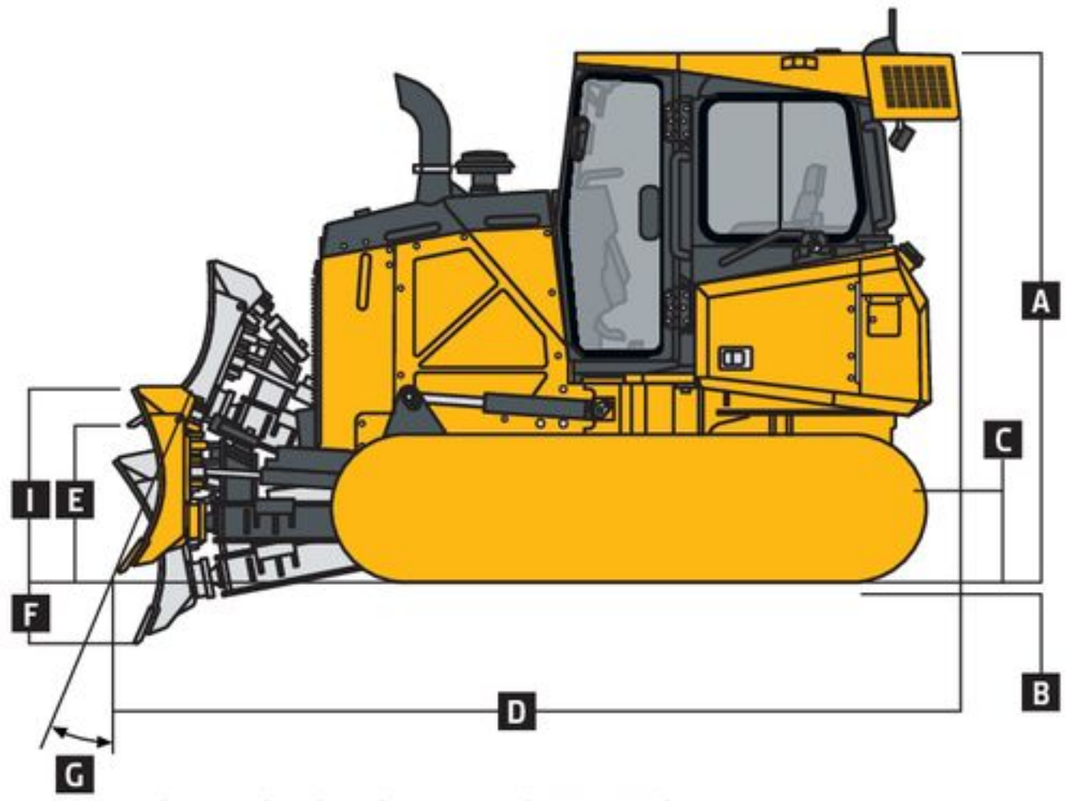

550K XLT / 550K LGP WITH POWER-ANGLE-TILT (PAT) BLADE

Machine Dimensions *(continued)*		550K XLT	550K LGP
Blade Type		*PAT*	*PAT*
Straight			
H	Blade Width	2667 mm (105 in.) (8 ft. 9 in.)	2921 mm (115 in.) (9 ft. 7 in.)
I	Blade Height	955 mm (3 ft. 2 in.)	955 mm (3 ft. 2 in.)
	SAE Capacity	1.8 m^3 (2.4 cu. yd.)	2.0 m^3 (2.6 cu. yd.)
	Weight	603 kg (1,330 lb.)	628 kg (1,385 lb.)
	C-Frame Assembly Weight (without blade)	399 kg (879 lb.)	399 kg (879 lb.)
J	Blade Angle	22.2 deg.	22.2 deg.
K	Overall Width with Blade Angled	2469 mm (8 ft. 1 in.)	2705 mm (8 ft. 11 in.)
L	Blade Tilt (uses tilt jack)	363 mm (14.3 in.)	399 mm (15.7 in.)
M	Cut Reach	117 mm (4.6 in.)	56 mm (2.2 in.)
N	Width Over Track	2007 mm (6 ft. 7 in.)	2362 mm (7 ft. 9 in.)
O	Cast Reach	345 mm (18.3 in.)	287 mm (11 in.)
Straight (option)			
H	Blade Width	2921 mm (115 in.) (9 ft. 7 in.)	3150 mm (124 in.) (10 ft. 4 in.)
I	Blade Height	955 mm (3 ft. 2 in.)	894 mm (35 in.)
	SAE Capacity	2.0 m^3 (2.6 cu. yd.)	1.9 m^3 (2.5 cu. yd.)
	Weight	628 kg (1,385 lb.)	631 kg (1,391 lb.)
	C-Frame Assembly Weight (without blade)	399 kg (879 lb.)	399 kg (879 lb.)
J	Blade Angle	22.2 deg.	22.2 deg.
K	Overall Width with Blade Angled	2705 mm (8 ft. 11 in.)	2916 mm (9 ft. 7 in.)
L	Blade Tilt (uses tilt jack)	399 mm (15.7 in.)	429 mm (16.9 in.)
M	Cut Reach	234 mm (9.2 in.)	163 mm (6.4 in.)
N	Width Over Track	2007 mm (6 ft. 7 in.)	2464 mm (8 ft. 1 in.)
O	Cast Reach	465 mm (18.3 in.)	391 mm (15.4 in.)

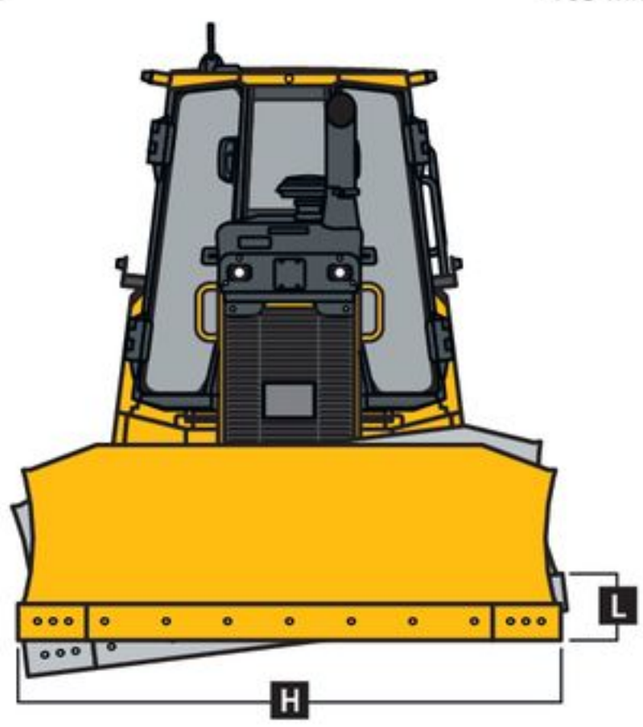

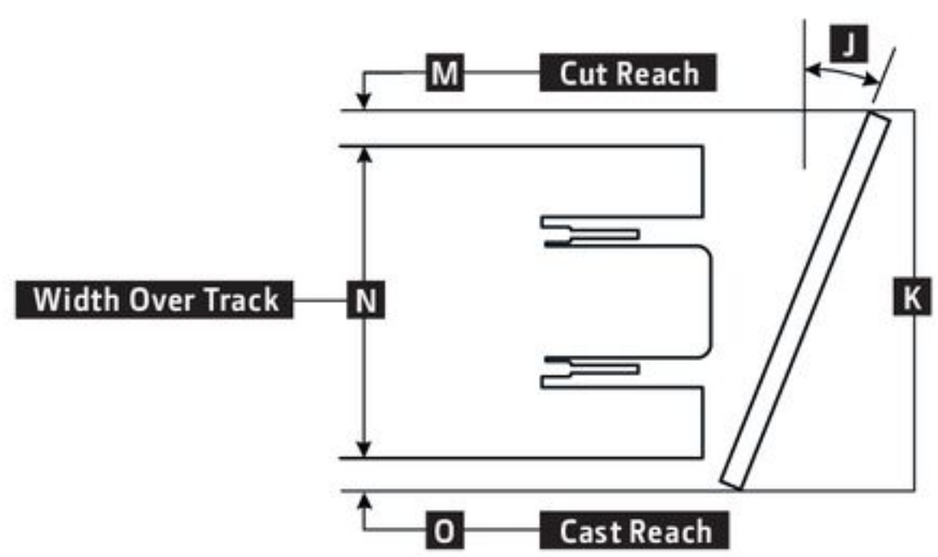

Rear Ripper		550K XLT / 550K LGP
Blade Type		*PAT*
Multi-shank parallelogram ripper with 5 pockets and 3 shanks		
Weight		981 kg (2,163 lb.)
P	Maximum Penetration	508 mm (20 in.)
Q	Maximum Clearance Under Tip	508 mm (20 in.)
R	Overall Length, Lowered Position	1450 mm (57 in.) (4 ft. 9 in.)
R'	Overall Length, Raised Position	1015 mm (40 in.) (3 ft. 4 in.)
S	Overall Beam Width	1830 mm (6 ft. 0 in.)
T	Slope Angle (full raise)	40 deg.
U	Ripping Width	1670 mm (5 ft. 6 in.)
V	Distance Between Shanks	806 mm (32 in.)

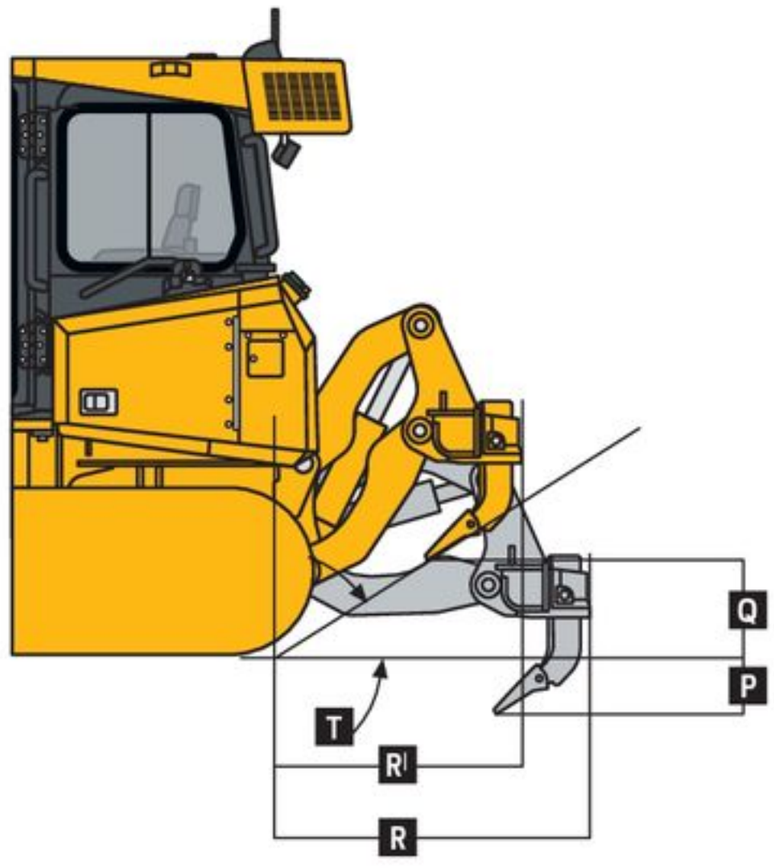

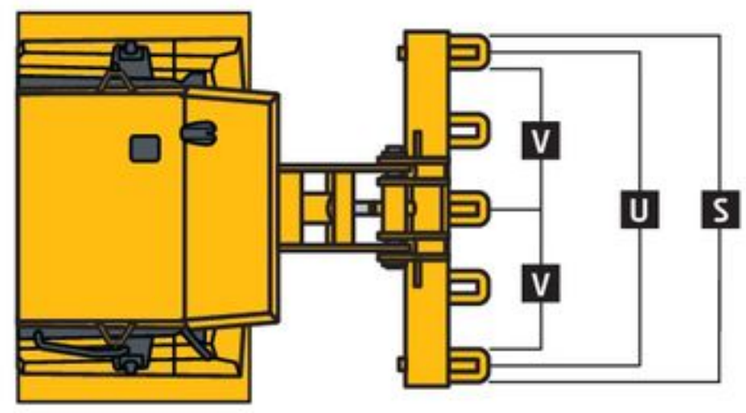

650K

Engine	650K XLT / 650K LGP
Blade Type	*Power-Angle-Tilt (PAT)*
Manufacturer and Model	John Deere PowerTech™ PWS 4045
Non-Road Emission Standard	EPA Final Tier 4/EU Stage IV
Displacement	4.5L (276 cu. in.)
SAE Net Rated Power	78 kW (104 hp) at 2,200 rpm
Net Peak Torque	475 Nm (350 ft.-lb.) at 1,400 rpm
Aspiration	Turbocharged with charge-air cooler
Air Cleaner	Dual-stage dry tube with tangential unloader
Cooling	
Type	Variable-speed suction fan with optional reversing feature
Engine Coolant Rating	–37 deg. C. (–34 deg. F)
Engine Radiator	10 fins per in.
Powertrain	
Transmission	Automatic, dual-path, hydrostatic drive; load-sensing feature automatically adjusts speed and power to match changing load conditions; each individually controlled track is powered by a variable-displacement piston pump and motor combination; ground-speed selection buttons on single-lever steering and direction control; independently selectable reverse speed ratios of 100% ,115%, or 130% of forward ground speed; decelerator pedal controls ground speed to stop
System Relief Pressure	44 470 kPa (6,450 psi)
Travel Speeds	
Forward and Reverse	8.0 km/h (5.0 mph)
Maximum (optional)	9.7 km/h (6.0 mph)
Steering	Single-lever steering, direction control, and counter-rotation; full power turns and infinitely variable track speeds provide unlimited maneuverability and optimum control; hydrostatic steering eliminates steering clutches and brakes
Final Drives	Triple-reduction final drives mounted independently of track frames and dozer push frames for isolation from shock loads
Total Ratio	52.13 to 1
Drawbar Pull	
Maximum	148 kN (33,600 lb.)
At 1.9 km/h (1.2 mph)	106 kN (23,800 lb.)
At 3.2 km/h (2.0 mph)	68 kN (15,200 lb.)
Brakes	
Service	Hydrostatic (dynamic) braking stops the machine whenever the direction-control lever is moved to neutral or the decelerator is depressed to the detent
Parking	Exclusive spring-applied, hydraulically released park-brake feature engages wet, multiple-disc brakes automatically whenever the engine stops, the operator depresses the decelerator pedal to the brake position, the unit is in neutral for 3 seconds (with detected motion), or the park-lock lever is in the park position; machine cannot be driven with brake applied, minimizing wear-out or need for adjustment

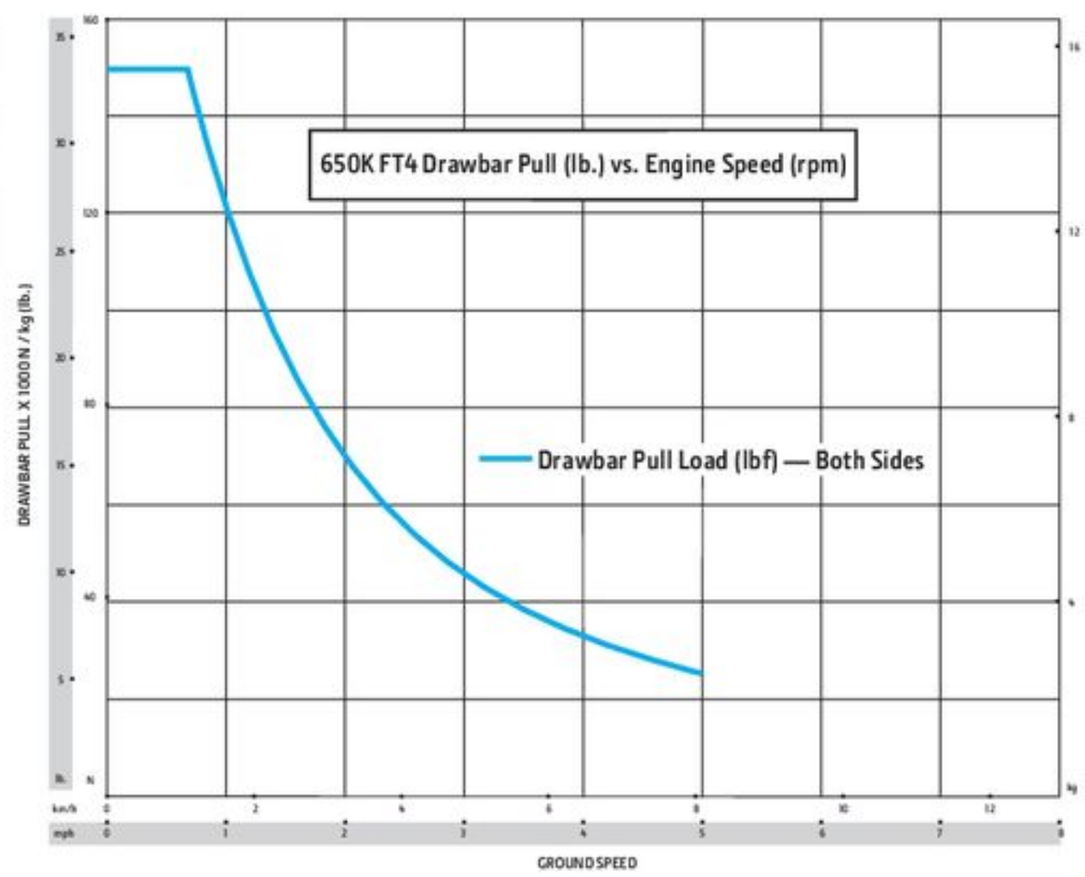

Hydraulics	
Type	Open-center hydraulic system with fixed-displacement gear pump
Pump Displacement	36.4 cc
System Relief Pressure	20 684 kPa (3,000 psi)
Maximum Flow at Unloaded High Idle	80 L/m (21 gpm)
Control	3-function direct-acting T-bar joystick with push-button angle function

Electrical	650K XLT / 650K LGP	
Blade Type	*Power-Angle-Tilt (PAT)*	
Voltage	24 volts	
Capacity		
Battery	950 CCA	
Reserve	190 min.	
Alternator Rating		
Cab	100 amp	
Canopy	100 amp	
Lights	Grille mounted (2), rear mounted (2), and rear reflectors (2)	
Undercarriage	**650K XLT**	**650K LGP**
Blade Type	*PAT*	*PAT*
Tracks	John Deere DuraTrax™ features large deep-heat-treated components; pins and bushings are sealed for life; rollers and idlers are permanently sealed and lubricated; full-length track-frame covers reduce material buildup and ease cleaning	
Track Gauge	1550 mm (61 in.)	1750 mm (69 in.)
Grouser Width	457 mm (18 in.)	711 mm (28 in.)
Chain	Sealed and lubricated	Sealed and lubricated
Shoes, Each Side	40	40
Track Rollers, Each Side	7	7
Track Length on Ground	2349 mm (92 in.)	2349 mm (92 in.)
Ground Contact Area	21 479 cm^2 (3,329 sq. in.)	33 412 cm^2 (5,179 sq. in.)
Ground Pressure	40.6 kPa (5.89 psi)	27.5 kPa (3.98 psi)
Track Pitch	171 mm (6.7 in.)	171 mm (6.7 in.)
Operator Station	**650K XLT / 650K LGP**	
ROPS (ISO 3471 – 2008) and FOPS (ISO 3449 – 2005)		
Serviceability		
Refill Capacities		
Fuel Tank with Lockable Cap	234 L (61.9 gal.)	
Diesel Exhaust Fluid (DEF) Tank	11.8 L (3.1 gal.)	
Cooling System with Recovery Tank	22.6 L (6.0 gal.)	
Engine Oil with Filter	19 L (20 qt.)	
Transmission/Hydraulic Reservoir with Filter	87.8 L (23.2 gal.)	
Operating Weights	**650K XLT**	**650K LGP**
Blade Type	*PAT*	*PAT*
Base Weight (with standard equipment, rollover protective structure [ROPS], full fuel tank, and 79-kg [175 lb.] operator)	9049 kg (19,949 lb.)	9514 kg (20,974 lb.)
Optional Components		
Cab with Pressurizer and Heater/Air Conditioner	306 kg (675 lb.)	306 kg (675 lb.)
ROPS Canopy		
Heater	39 kg (85 lb.)	39 kg (85 lb.)
Front and Door Screens	81 kg (179 lb.)	81 kg (179 lb.)
Rear Screen	34 kg (76 lb.)	34 kg (76 lb.)
Side Screens	43 kg (94 lb.)	43 kg (94 lb.)
Limb Risers (ROPS canopy and cab)	104 kg (229 lb.)	104 kg (229 lb.)
Counterweight		
Front	109 kg (240 lb.)	109 kg (240 lb.)
Rear	150 kg (330 lb.)	150 kg (330 lb.)
Retrieval Hitch	23 kg (50 lb.)	23 kg (50 lb.)
Drawbar, Extended Rigid	33 kg (72 lb.)	33 kg (72 lb.)
Winch	652 kg (1,437 lb.)	652 kg (1,437 lb.)
Fairlead, 4 Roller	85 kg (187 lb.)	85 kg (187 lb.)
Center Chain Guides	41 kg (90 lb.)	41 kg (90 lb.)
Full-Length Rock Guards	98 kg (216 lb.)	98 kg (216 lb.)
Maximum Life Undercarriage	182 kg (400 lb.)	182 kg (400 lb.)
Track Shoes		
457 mm (18 in.)	In base	—
510 mm (20 in.)	83 kg (183 lb.)	– 344 kg (– 760 lb.)
610 mm (24 in.)	—	– 172 kg (– 380 lb.)
710 mm (28 in.)	—	In base