924K, 930K, 938K

Wheel Loaders

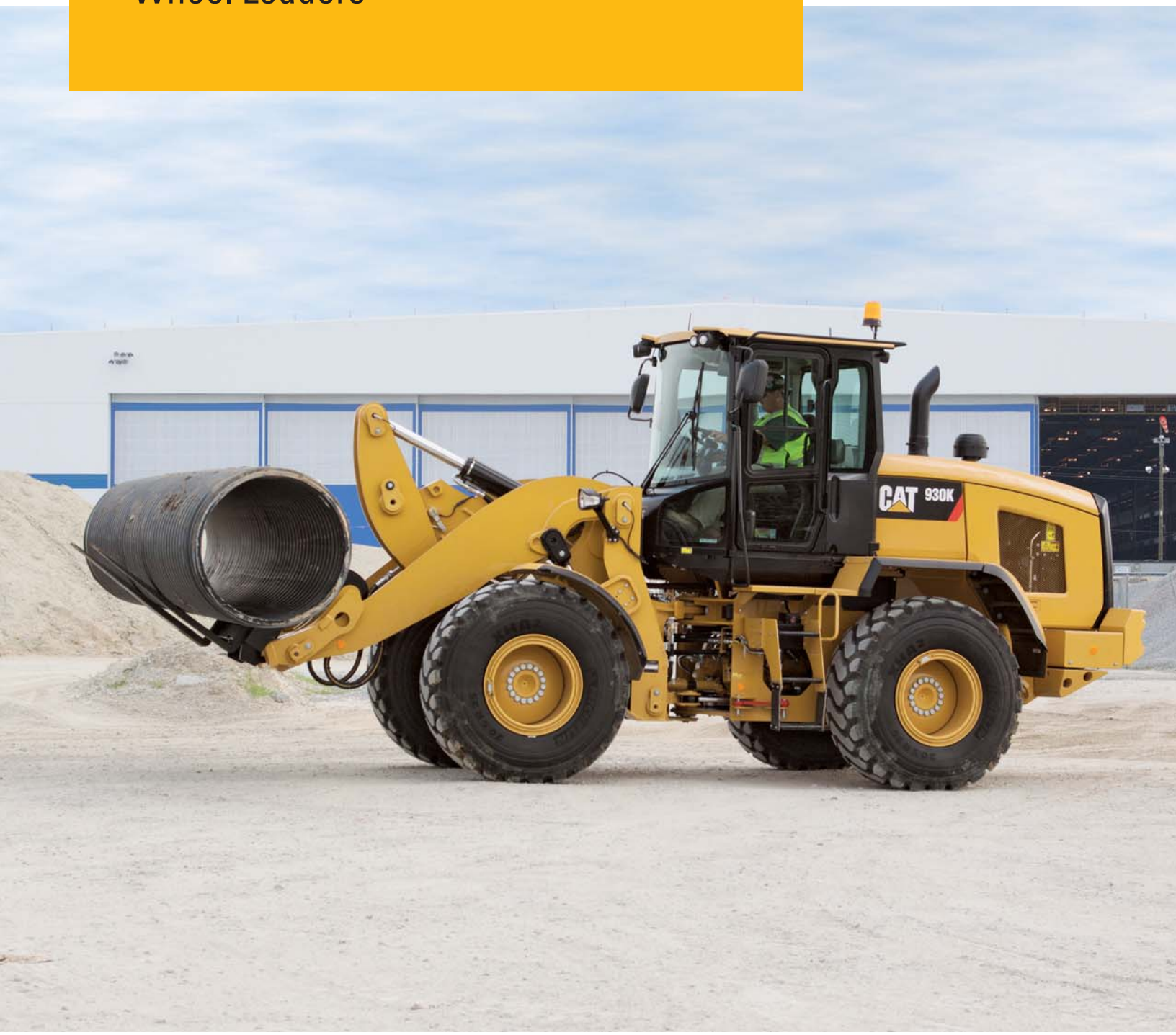

	924K	930K	938K
Engine Model*	Cat® C6.6 ACERT™	Cat® C6.6 ACERT™	Cat® C6.6 ACERT™
Maximum Gross Power:			
ISO 14396	109 kW (146 hp)	119 kW (160 hp)	129 kW (173 hp)
ISO 14396 (DIN)	109 kW (148 hp)	119 kW (162 hp)	129 kW (175 hp)
Bucket Capacity	1.9-5.0 m^3 (2.5-6.5 yd^3)	2.1-5.0 m^3 (2.7-6.5 yd^3)	2.5-5.0 m^3 (3.3-6.5 yd^3)
Full Turn Tip Load	7419 kg (16,352 lb)	8369 kg (18,444 lb)	9527 kg (20,997 lb)
Operating Weight	12 868 kg (28,360 lb)	13 829 kg (30,479 lb)	15 928 kg (35,104 lb)

*Engine meets U.S. EPA Tier 4 Interim/EU Stage IIIB emission standards.

Engine

	924K		930K		938K	
Engine Model	Cat® C6.6 ACERT™		Cat® C6.6 ACERT™		Cat® C6.6 ACERT™	
Maximum Gross Power						
ISO 14396	109 kW	146 hp	119 kW	160 hp	129 kW	173 hp
ISO 14396 (DIN)	109 kW	148 hp	119 kW	162 hp	129 kW	175 hp
Rated Net Power @ 1,800 rpm						
SAE J1349	105 kW	141 hp	115 kW	154 hp	126 kW	169 hp
ISO 9249 (1977)/EEC 80/1269	106 kW	142 hp	116 kW	156 hp	127 kW	170 hp
ISO 9249 (DIN)	106 kW	144 hp	116 kW	158 hp	127 kW	173 hp
Maximum Gross Torque						
ISO 14396	725 N·m	534 lbf-ft	775 N·m	571 lbf-ft	825 N·m	608 lbf-ft
Maximum Net Torque						
SAE J1349	699 N·m	515 lbf-ft	748 N·m	551 lbf-ft	802 N·m	591 lbf-ft
ISO 9249 (1977)/EEC 80/1269	706 N·m	520 lbf-ft	756 N·m	557 lbf-ft	811 N·m	598 lbf-ft
Displacement	6.6 L	402 in^3	6.6 L	402 in^3	6.6 L	402 in^3
Bore	105 mm	4 in	105 mm	4 in	105 mm	4 in
Stroke	127 mm	5 in	127 mm	5 in	127 mm	5 in

- Net power ratings are tested at the reference conditions for the specified standard.
- Net power shown is the power available at the flywheel when the engine is equipped with alternator, air cleaner, diesel exhaust filter, and fan at minimum speed.
- No derating required up to 3000 m (10,000 ft) altitude. Auto derate protects hydraulic and transmission systems.
- Flywheel per the SAE reference conditions when the fan is at maximum speed.
- Cat C6.6 engine meets U.S. EPA Tier 4 Interim (EU Stage IIIB) emission requirements.
- K Series Small Wheel Loaders have a passive regeneration system with a long life Diesel Particulate Filter.

Engine Power and Torque

924K

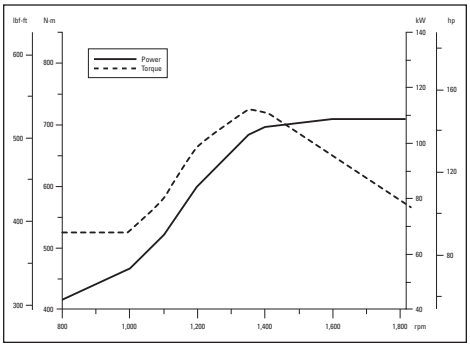

930K

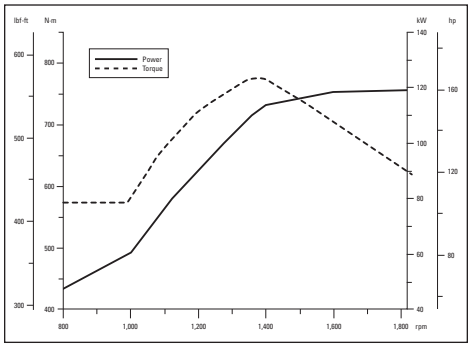

938K

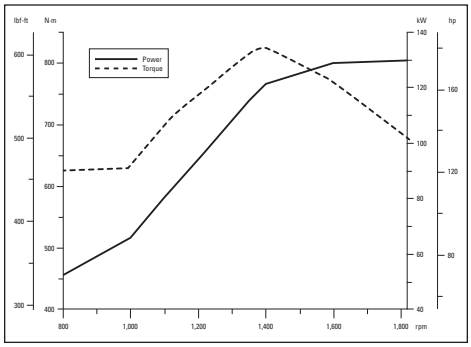

Buckets

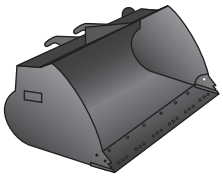

- Performance Series Buckets utilize a long floor and open throat resulting in easy loading and good material retention.

	924K		930K		938K	
General Purpose	1.9-2.5 m^3	2.5-3.3 yd^3	2.1-2.7 m^3	2.7-3.5 yd^3	2.5-3.2 m^3	3.3-4.2 yd^3
Light Material	3.5-5.0 m^3	4.6-6.5 yd^3	3.5-5.0 m^3	4.6-6.5 yd^3	3.5-5.0 m^3	4.6-6.5 yd^3

Weights

	924K		930K		938K	
Operating weight – Standard Lift	12 868 kg	28,360 lb	13 829 kg	30,479 lb	15 928 kg	35,104 lb
Operating weight – High Lift	13 166 kg	29,018 lb	14 077 kg	31,024 lb	16 177 kg	35,653 lb

- Specifications shown are for a machine configured with general purpose Fusion bucket, bolt-on cutting edges, counterweights, additional guarding, 80 kg (176 lb) operator, and Michelin 20.5 R25 (L-3) XHA2 tires.
  – 924K is configured with a 1.9 m^3 (2.5 yd^3) Fusion bucket with bolt-on cutting edge.
  – 930K is configured with a 2.1 m^3 (2.7 yd^3) Fusion bucket with bolt-on cutting edge.
  – 938K is configured with a 2.5 m^3 (3.3 yd^3) Fusion bucket with bolt-on cutting edge.

Steering

- Steering system uses a dedicated load sensing variable displacement pump with dual double acting cylinders.

	924K		930K		938K	
Steering articulation angle each direction	40°		40°		40°	
Steering cylinder: double acting						
Bore diameter	70 mm	2.8 in	70 mm	2.8 in	80 mm	3.1 in
Rod diameter	40 mm	1.6 in	40 mm	1.6 in	50 mm	2 in
Stroke	438 mm	17.2 in	438 mm	17.2 in	399 mm	15.7 in
Maximum flow – steering pump	130 L/min	34 gal/min	130 L/min	34 gal/min	130 L/min	34 gal/min
Maximum working pressure – steering pump	24 130 kPa	3,500 psi	24 130 kPa	3,500 psi	24 130 kPa	3,500 psi
Maximum steering torque						
0° (straight machine)	50 375 N·m	37,155 lbf-ft	50 375 N·m	37,155 lbf-ft	57 630 N·m	42,506 lbf-ft
40° (full turn)	37 620 N·m	27,747 lbf-ft	37 620 N·m	27,747 lbf-ft	42 570 N·m	31,398 lbf-ft
Steering cycle times (full left to full right)						
800 rpm: pump flow limited	2.8 seconds		2.8 seconds		3.1 seconds	
1,800 rpm: 90 rpm steering wheel speed	2.4 seconds		2.4 seconds		2.3 seconds	
Number of steering wheel turns						
Full left to full right or full right to full left	3.5 turns		3.5 turns		3.3 turns	

Loader Hydraulic System

- Implement system uses a dedicated load sensing variable displacement pump with dual double acting lift cylinders and a single double acting tilt cylinder.
- 3rd function flow is fully adjustable from 20% to 100% of maximum flow through the secondary display when equipped.
- 4th function flow is fixed.

	924K		930K		938K	
Maximum flow – implement pump	150 L/min	40 gal/min	190 L/min	50 gal/min	190 L/min	50 gal/min
3rd function maximum flow	150 L/min	40 gal/min	190 L/min	50 gal/min	190 L/min	50 gal/min
4th function maximum flow	75 L/min	20 gal/min	75 L/min	20 gal/min	75 L/min	20 gal/min
Maximum working pressure – implement pump	26 000 kPa	3,771 psi	25 000 kPa	3,626 psi	28 000 kPa	4,061 psi
Relief pressure – tilt cylinder	28 000 kPa	4,061 psi	28 000 kPa	4,061 psi	30 000 kPa	4,351 psi
3rd function maximum working pressure	26 000 kPa	3,771 psi	25 000 kPa	3,626 psi	28 000 kPa	4,061 psi
3rd function relief pressure	28 000 kPa	4,061 psi	28 000 kPa	4,061 psi	30 000 kPa	4,351 psi
4th function maximum working pressure	26 000 kPa	3,771 psi	25 000 kPa	3,626 psi	28 000 kPa	4,061 psi
4th function relief pressure	28 000 kPa	4,061 psi	28 000 kPa	4,061 psi	30 000 kPa	4,351 psi
Lift cylinder: double acting						
Bore diameter	110 mm	4.3 in	120 mm	4.7 in	120 mm	4.7 in
Rod diameter	60 mm	2.4 in	65 mm	2.6 in	65 mm	2.6 in
Stroke	728 mm	28.7 in	728 mm	28.7 in	789 mm	31.1 in
Tilt cylinder: double acting						
Bore diameter	130 mm	5.1 in	150 mm	5.9 in	150 mm	5.9 in
Rod diameter	70 mm	2.8 in	90 mm	3.5 in	90 mm	3.5 in
Stroke	555 mm	21.9 in	555 mm	21.9 in	555 mm	21.9 in
Hydraulic cycle times (1,800 rpm)						
Raise (ground level to maximum lift)	5.5 seconds		5.1 seconds		5.5 seconds	
Dump (at maximum lift height)	1.5 seconds		1.5 seconds		1.5 seconds	
Float down (maximum lift to ground level)	2.6 seconds		2.7 seconds		2.7 seconds	
Total cycle time	9.6 seconds		9.3 seconds		9.7 seconds	
Hydraulic cycle times (1,000 rpm)						
Raise (ground level to maximum lift)	9.6 seconds		9.1 seconds		9.8 seconds	
Dump (at maximum lift height)	3.0 seconds		2.6 seconds		2.6 seconds	
Float down (maximum lift to ground level)	2.6 seconds		2.7 seconds		2.7 seconds	

Service Refill Capacities

	924K		930K		938K	
Fuel tank	195 L	51.5 gal	195 L	51.5 gal	195 L	51.5 gal
Cooling system	30 L	7.9 gal	30 L	7.9 gal	32 L	8.5 gal
Engine crankcase	20 L	5.3 gal	20 L	5.3 gal	20 L	5.3 gal
Transmission (gear box)	8.5 L	2.2 gal	8.5 L	2.2 gal	11 L	2.9 gal
Axles						
Front	21 L	5.5 gal	26 L	6.9 gal	35 L	9.2 gal
Rear	21 L	5.5 gal	25 L	6.6 gal	35 L	9.2 gal
Hydraulic system (including tank)	160 L	42.3 gal	165 L	43.6 gal	170 L	44.9 gal
Hydraulic tank	90 L	23.8 gal	90 L	23.8 gal	90 L	23.8 gal

Transmission

*Creeper control allows maximum speed range adjustability from 1 km/h (0.6 mph) to 13 km/h (8 mph) in Range 1 through the secondary display when equipped. Factory default is 7 km/h (4.4 mph).

	924K		930K		938K	
Forward						
Range 1*	1-13 km/h	0.6-8.0 mph	1-13 km/h	0.6-8.0 mph	1-13 km/h	0.6-8.0 mph
Range 2	13 km/h	8 mph	13 km/h	8 mph	13 km/h	8 mph
Range 3	27 km/h	17 mph	27 km/h	17 mph	27 km/h	17 mph
Range 4	40 km/h	25 mph	40 km/h	25 mph	40 km/h	25 mph
Reverse						
Range 1*	1-13 km/h	0.6-8.0 mph	1-13 km/h	0.6-8.0 mph	1-13 km/h	0.6-8.0 mph
Range 2	13 km/h	8 mph	13 km/h	8 mph	13 km/h	8 mph
Range 3	27 km/h	17 mph	27 km/h	17 mph	27 km/h	17 mph
Range 4	40 km/h	25 mph	40 km/h	25 mph	40 km/h	25 mph

Power Train

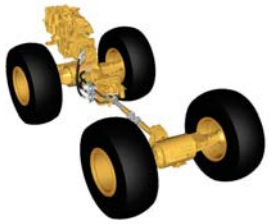

- Power train is governed by the Caterpillar exclusive Intelligent Power Management system to deliver peak performance and efficiency.

**Differential front locking axle can be engaged on the go at full torque up to 10 km/h (6.2 mph) on the 924K/930K and up to 20 km/h (12.4 mph) on the 938K.

	924K	930K	938K
Front axle	Fixed	Fixed	Fixed
Traction aid**	Locking differential standard	Locking differential standard	Locking differential standard
Rear axle	Oscillating	Oscillating	Oscillating
Oscillation with 17.5 tires	± 13 degrees	–	–
Oscillation with 20.5 tires	± 11 degrees	± 11 degrees	± 11 degrees
Traction aid	Limited slip differential optional	Limited slip differential optional	Limited slip differential optional
Brakes			
Service brakes	Inboard wet disc	Inboard wet disc	Outboard wet disc
Park brake	Spring applied hydraulically released	Spring applied hydraulically released	Spring applied hydraulically released

Tires

	924K	930K	938K
17.5 R25, radial (L-2)	Yes		
17.5 R25, radial (L-3)	Yes		
17.5 R25, radial (L-5)	Yes		
20.5-25, 12PR (L-2)	Yes	Yes	Yes
20.5-25, 12PR (L-3)	Yes	Yes	Yes
20.5-25, 16PR (L-5)	Yes	Yes	Yes
20.5 R25, radial (L-2)	Yes	Yes	Yes
20.5 R25, radial (L-3)*	Yes	Yes	Yes
20.5 R25, radial (L-5)	Yes	Yes	Yes
550/65 R25, radial (L-3)	Yes		
600/65 R25, radial (L-3)		Yes	
650/65 R25, radial (L-3)			Yes
Skidder/Agriculture	Yes	Yes	Yes
Flexports Gen II	Yes	Yes	Yes

*Standard tire.
• Other tire choices available, contact your Cat dealer for details. Not all tires are available in all regions.
• In certain applications, the loader's productive capabilities may exceed the tires' tonnes-km/h (ton-mph) capabilities.
• Caterpillar recommends that you consult a tire supplier to evaluate all conditions before selecting a tire model.

Cab

• ROPS: SAE J1040 MAY94, ISO 3471-1994.
• FOPS: SAE J/ISO 3449 APR98, Level II, ISO 3449 1992 Level II.
• Cat cab and Rollover Protective Structures (ROPS) are standard in North America and Europe.
• The declared dynamic operator sound pressure levels per ISO 6396:2008**, when properly installed and maintained, are:
  – Standard cab: 68 ±3 dB(A)
  – Deluxe cab: 66 ±2 dB(A)

**The measurements were conducted with the cab doors and windows closed and at 70% of the maximum engine cooling fan speed. The sound level may vary at different engine cooling fan speeds.

Operating Specifications

	924K		930K		938K	
Tipping load – straight (ISO 14397-1)	8644 kg	19,051 lb	9803 kg	21,605 lb	11 209 kg	24,704 lb
Tipping load – full turn (ISO 14397-1)	7419 kg	16,352 lb	8369 kg	18,444 lb	9527 kg	20,997 lb
Clearance: full lift and 45° dump	2885 mm	9'5"	2828 mm	9'3"	2834 mm	9'3"
Reach: full lift and 45° dump	1024 mm	3'4"	1064 mm	3'5"	1146 mm	3'9"
Steering articulation angle each direction	40°		40°		40°	

924K, 930K, 938K Wheel Loader Specifications

Dimensions with Bucket

All dimensions are approximate. Dimensions will vary with bucket and tire choice. Refer to Operating Specifications with Buckets.

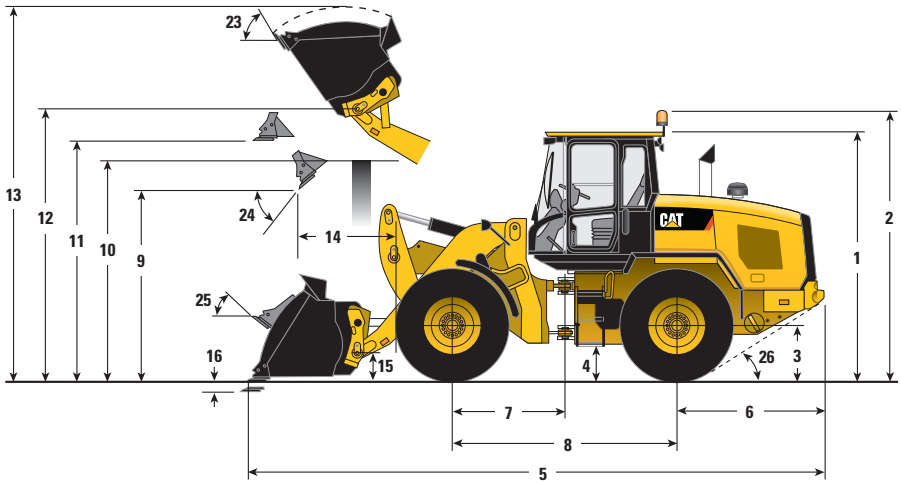

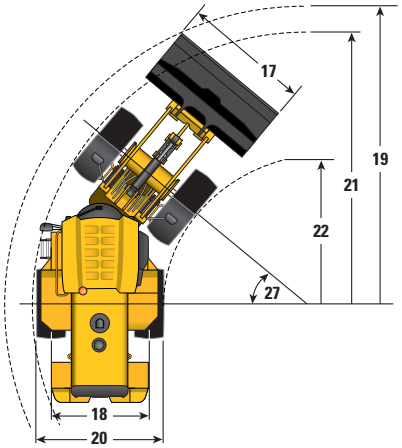

	Standard Lift					
	924K		930K		938K	
** 1 Height: ground to cab	3340 mm	10'11"	3340 mm	10'11"	3340 mm	10'11"
** 2 Height: ground to beacon	3669 mm	12'0"	3669 mm	12'0"	3669 mm	12'0"
** 3 Height: ground axle center	685 mm	2'2"	685 mm	2'2"	685 mm	2'2"
** 4 Height: ground clearance	400 mm	1'3"	400 mm	1'3"	390 mm	1'3"
* 5 Length: overall	7451 mm	24'5"	7530 mm	24'8"	7656 mm	25'1"
6 Length: rear axle to bumper	1986 mm	6'6"	1993 mm	6'6"	1968 mm	6'5"
7 Length: hitch to front axle	1500 mm	4'11"	1500 mm	4'11"	1525 mm	5'0"
8 Length: wheel base	3000 mm	9'10"	3000 mm	9'10"	3050 mm	10'0"
* 9 Clearance: bucket at 45°	2885 mm	9'5"	2828 mm	9'3"	2834 mm	9'3"
** 10 Clearance: load over height	3330 mm	10'11"	3331 mm	10'11"	3354 mm	11'0"
** 11 Clearance: level bucket	3580 mm	11'8"	3580 mm	11'8"	3641 mm	11'11"
** 12 Height: bucket pin	3907 mm	12'9"	3907 mm	12'9"	3969 mm	13'0"
** 13 Height: overall	5076 mm	16'7"	5147 mm	16'10"	5273 mm	17'3"
* 14 Reach: bucket at 45°	1024 mm	3'4"	1064 mm	3'5"	1146 mm	3'9"
15 Carry height: bucket pin	458 mm	1'6"	458 mm	1'6"	467 mm	1'6"
** 16 Dig depth	100 mm	3.9"	100 mm	3.9"	101 mm	3.9"
17 Width: bucket	2550 mm	8'4"	2550 mm	8'4"	2750 mm	9'0"
18 Width: tread center	1930 mm	6'3"	1930 mm	6'3"	2065 mm	6'9"
19 Turning radius: over bucket	5924 mm	19'5"	5945 mm	19'6"	6133 mm	20'1"
20 Width: over tires	2540 mm	8'4"	2540 mm	8'4"	2675 mm	8'9"
21 Turning radius: outside of tires	5402 mm	17'8"	5402 mm	17'8"	5537 mm	18'1"
22 Turning radius: inside of tires	2851 mm	9'4"	2851 mm	9'4"	2852 mm	9'4"
23 Rack angle at full lift	54°		54°		54°	
24 Dump angle at full lift	50°		49°		49°	
25 Rack angle at carry	45°		45°		45°	
26 Departure angle	33°		33°		33°	
27 Articulation angle	40°		40°		40°	
Operating weight	12 868 kg	28,360 lb	13 829 kg	30,479 lb	15 928 kg	35,104 lb

*Vary with bucket.

**Vary with tire.

Dimensions listed are for a machine configured with general purpose Fusion bucket, bolt-on cutting edge, counterweights, additional guarding, 80 kg (176 lb) operator and Michelin 20.5 R25 (L-3) XHA2 tires.

Dimensions with Bucket

		High Lift					
		924K		930K		938K	
** 1	Height: ground to cab	3340 mm	10'11"	3340 mm	10'11"	3340 mm	10'11"
** 2	Height: ground to beacon	3669 mm	12'0"	3669 mm	12'0"	3669 mm	12'0"
** 3	Height: ground axle center	685 mm	2'2"	685 mm	2'2"	685 mm	2'2"
** 4	Height: ground clearance	400 mm	1'3"	400 mm	1'3"	390 mm	1'3"
* 5	Length: overall	8093 mm	26'6"	8324 mm	27'3"	8397 mm	27'6"
6	Length: rear axle to bumper	1986 mm	6'6"	1993 mm	6'6"	1968 mm	6'5"
7	Length: hitch to front axle	1500 mm	4'11"	1500 mm	4'11"	1525 mm	5'0"
8	Length: wheel base	3000 mm	9'10"	3000 mm	9'10"	3050 mm	10'0"
* 9	Clearance: bucket at 45°	3378 mm	11'0"	3421 mm	11'2"	3415 mm	11'2"
** 10	Clearance: load over height	3550 mm	11'7"	3540 mm	11'7"	3561 mm	11'8"
** 11	Clearance: level bucket	4073 mm	13'4"	4173 mm	13'8"	4222 mm	13'10"
** 12	Height: bucket pin	4400 mm	14'5"	4500 mm	14'9"	4550 mm	14'11"
** 13	Height: overall	5569 mm	18'3"	5740 mm	18'9"	5853 mm	19'2"
* 14	Reach: bucket at 45°	1261 mm	4'1"	1385 mm	4'6"	1413 mm	4'7"
15	Carry height: bucket pin	649 mm	2'1"	692 mm	2'3"	686 mm	2'2"
** 16	Dig depth	135 mm	5.3"	135 mm	5.3"	135 mm	5.3"
17	Width: bucket	2550 mm	8'4"	2550 mm	8'4"	2750 mm	9'0"
18	Width: tread center	1930 mm	6'3"	1930 mm	6'3"	2065 mm	6'9"
19	Turning radius: over bucket	6234 mm	20'5"	6329 mm	20'9"	6490 mm	21'3"
20	Width: over tires	2540 mm	8'4"	2540 mm	8'4"	2675 mm	8'9"
21	Turning radius: outside of tires	5402 mm	17'8"	5402 mm	17'8"	5537 mm	18'1"
22	Turning radius: inside of tires	2851 mm	9'4"	2851 mm	9'4"	2852 mm	9'4"
23	Rack angle at full lift	51°		53°		53°	
24	Dump angle at full lift	49°		48°		47°	
25	Rack angle at carry	49°		50°		50°	
26	Departure angle	33°		33°		33°	
27	Articulation angle	40°		40°		40°	
	Operating weight	13 166 kg	29,018 lb	14 077 kg	31,024 lb	16 177 kg	35,653 lb

*Vary with bucket.

**Vary with tire.

Dimensions listed are for a machine configured with general purpose Fusion bucket, bolt-on cutting edge, counterweights, additional guarding, 80 kg (176 lb) operator and Michelin 20.5 R25 (L-3) XHA2 tires.

Supplemental Operating Data – Tires

	924K				930K				938K			
	550/65 R25		17.5 R25 (L-2)		600/65 R25		20.5R25 (L-5)		650/65 R25		Flexport (Gen II)	
	mm	in	mm	in	mm	in	mm	in	mm	in	mm	in
Vertical heights	–70	–2.8"	–99	–3.9"	–55	–2.2"	+15	+0.6"	–35	–1.4"	+59	+2.3"
Reach: bucket at 45°	+43	+1.7"	+75	+3"	+29	+1.1"	–21	–0.8"	–5	–0.2"	–23	–0.9"
Width: over tires	+21	+0.8"	–69	–2.7"	+98	+3.9"	0	0"	+121	+4.8"	+65	+2.6"
Turning radius: outside of tires	+4	+0.2"	–45	–1.8"	+42	+1.7"	+1	0"	+53	+2.1"	+61	+2.4"
Turning radius: inside of tires	–11	–0.4"	35	+1.4"	–49	–1.9"	0	0"	–61	–2.4"	–33	–1.3"
	kg	lb	kg	lb	kg	lb	kg	lb	kg	lb	kg	lb
Tipping load – straight	–83	–182	–348	–767	+9	+19	+444	+978	+137	+301	+1864	+4,108
Tipping load – full turn	–72	–157	–301	–663	+8	+17	+384	+846	+118	+260	+1612	+3,552
Operating weight	–126	–277	–530	–1,167	+14	+30	+678	+1,494	+210	+462	+2866	+6,316

Bucket Specifications

924K Operating Specifications with Buckets

		General Purpose							
		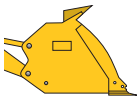 Pin On			Fusion			ISO 23727	
Rated capacity	m^3	1.9	2.1	2.3	1.9	2.1	2.3	2.1	2.3
	yd^3	2.5	2.7	3.0	2.5	2.7	3.0	2.7	3.0
Struck capacity	m^3	1.7	1.9	2.1	1.7	1.9	2.1	2.0	2.2
	yd^3	2.2	2.5	2.7	2.2	2.5	2.7	2.6	2.9
Width: bucket	mm	2550	2550	2550	2550	2550	2550	2550	2550
	ft/in	8'4"	8'4"	8'4"	8'4"	8'4"	8'4"	8'4"	8'4"
Nominal material density, 100% fill factor	kg/m^3	2048	1834	1658	1952	1748	1580	1682	1520
	lb/yd^3	3,430	3,144	2,801	3,270	2,996	2,670	2,882	2,568
Clearance: full lift, 45° dump	mm	2912	2855	2807	2885	2828	2779	2747	2698
	ft/in	9'6"	9'4"	9'2"	9'5"	9'3"	9'1"	9'0"	8'10"
Reach: full lift, 45° dump	mm	992	1033	1070	1024	1064	1102	1168	1205
	ft/in	3'3"	3'4"	3'6"	3'4"	3'5"	3'7"	3'9"	3'11"
Reach: 2130 mm (7'0") clearance, 45° dump	mm	1547	1560	1573	1566	1578	1590	1639	1648
	ft/in	5'0"	5'1"	5'1"	5'1"	5'2"	5'2"	5'4"	5'4"
Reach: level arm, level bucket	mm	2278	2350	2413	2320	2392	2455	2523	2586
	ft/in	7'5"	7'8"	7'11"	7'7"	7'10"	8'0"	8'3"	8'5"
Dig depth	mm	100	100	100	100	100	100	93	93
	in	3.9"	3.9"	3.9"	3.9"	3.9"	3.9"	3.7"	3.7"
Length: overall	mm	7409	7481	7544	7451	7523	7586	7648	7711
	ft/in	24'3"	24'6"	24'9"	24'5"	24'8"	24'10"	25'1"	25'3"
Height: overall	mm	5052	5122	5180	5076	5147	5205	5236	5294
	ft/in	16'6"	16'9"	16'11"	16'7"	16'10"	17'0"	17'2"	17'4"
Turning radius, bucket at carry	mm	5912	5933	5951	5924	5945	5964	5964	5984
	ft/in	19'4"	19'5"	19'6"	19'5"	19'6"	19'6"	19'6"	19'7"
Tipping load – straight, ISO 14397-1*	kg	9029	8942	8860	8644	8560	8480	8235	8157
	lb	19,899	19,708	19,527	19,051	18,865	18,690	18,150	17,978
Tipping load – straight, rigid tire**	kg	9405	9315	9229	9004	8916	8833	8578	8497
	lb	20,728	20,530	20,340	19,845	19,651	19,468	18,906	18,727
Tipping load – full turn, ISO 14397-1*	kg	7783	7702	7626	7419	7341	7268	7062	6990
	lb	17,152	16,975	16,808	16,352	16,180	16,018	15,565	15,406
Tipping load – full turn, rigid tire**	kg	8279	8194	8113	7893	7810	7732	7513	7437
	lb	18,247	18,059	17,881	17,396	17,212	17,040	16,559	16,390
Breakout force	kg	10 685	9956	9388	10 223	9547	9019	8451	8020
	lb	23,550	21,943	20,691	22,531	21,041	19,876	18,625	17,675
Operating weight	kg	12 527	12 571	12 609	12 868	12 912	12 950	12 859	12 897
	lb	27,608	27,706	27,790	28,360	28,458	28,541	28,342	28,426

*Full compliance to ISO 14397-1 (2007) Sections 1 through 6, which requires 2% verification between calculation and testing.

**Compliance to ISO 14397-1 (2007) Sections 1 through 5.

Dimensions listed are for a 924K configured with bucket, bolt-on cutting edge, standard counterweights, additional guarding, 80 kg (176 lb) operator, and Michelin 20.5 R25 (L-3) XHA2 tires at a pressure of 4.14 bar (60 psi) in the front tires and 2.76 bar (40 psi) in the rear tires.

924K Operating Specifications with Buckets

		Light Material						
		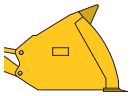 Pin On			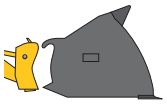 Fusion			High Lift
Rated capacity	m^3	3.5	4.2	5.0	3.5	4.2	5.0	–
	yd^3	4.6	5.5	6.5	4.6	5.5	6.5	–
Struck capacity	m^3	3.3	4.0	4.8	3.3	4.0	4.8	–
	yd^3	4.3	5.2	6.3	4.3	5.2	6.3	–
Width: bucket	mm	2750	2750	2750	2750	2750	2750	–
	ft/in	9'0"	9'0"	9'0"	9'0"	9'0"	9'0"	–
Nominal material density, 100% fill factor	kg/m^3	1030	829	693	979	787	658	–
	lb/yd^3	1,727	1,395	1174	1,642	1,324	1115	–
Clearance: full lift, 45° dump	mm	2629	2509	2509	2600	2479	2479	+493
	ft/in	8'7"	8'2"	8'2"	8'6"	8'1"	8'1"	+1'7"
Reach: full lift, 45° dump	mm	1137	1257	1257	1166	1286	1286	+237
	ft/in	3'8"	4'1"	4'1"	3'9"	4'2"	4'2"	+9"
Reach: 2130 mm (7'0") clearance, 45° dump	mm	1538	1579	1579	1549	1588	1588	+572
	ft/in	5'0"	5'2"	5'2"	5'0"	5'2"	5'2"	+1'10"
Reach: level arm, level bucket	mm	2603	2773	2773	2645	2815	2815	+523
	ft/in	8'6"	9'1"	9'1"	8'8"	9'2"	9'2"	+1'8"
Dig depth	mm	100	100	100	100	100	100	+35
	in	3.9"	3.9"	3.9"	3.9"	3.9"	3.9"	+1.4"
Length: overall	mm	7734	7904	7904	7776	7946	7946	+642
	ft/in	25'4"	25'11"	25'11"	25'6"	26'0"	26'0"	+2'1"
Height: overall	mm	5284	5445	5725	5309	5471	5752	+493
	ft/in	17'4"	17'10"	18'9"	17'5"	17'11"	18'10"	+1'7"
Turning radius, bucket at carry	mm	6099	6152	6152	6112	6166	6166	+311
	ft/in	20'0"	20'2"	20'2"	20'0"	20'2"	20'2"	+1'0"
Tipping load – straight, ISO 14397-1*	kg	8418	8149	8116	8040	7776	7745	–2145
	lb	18,553	17,959	17,887	17,720	17,138	17,070	–4,726
Tipping load – straight, rigid tire**	kg	8769	8488	8454	8375	8100	8068	–2234
	lb	19,326	18,708	18,632	18,459	17,852	17,781	–4,923
Tipping load – full turn, ISO 14397-1*	kg	7210	6962	6927	6853	6609	6577	–1892
	lb	15,890	15,343	15,267	15,104	14,567	14,496	–4,170
Tipping load – full turn, rigid tire**	kg	7670	7406	7369	7291	7031	6997	–2013
	lb	16,905	16,322	16,242	16,068	15,497	15,421	–4,436
Breakout force	kg	7888	6893	6842	7603	6660	6611	–494
	lb	17,385	15,192	15,080	16,757	14,678	14,571	–1,089
Operating weight	kg	12 925	13 062	13 132	13 275	13 415	13 480	+299
	lb	28,487	28,789	28,943	29,258	29,566	29,709	+659

*Full compliance to ISO 14397-1 (2007) Sections 1 through 6, which requires 2% verification between calculation and testing.

**Compliance to ISO 14397-1 (2007) Sections 1 through 5.

Dimensions listed are for a 924K configured with bucket, bolt-on cutting edge, standard counterweights, additional guarding, 80 kg (176 lb) operator, and Michelin 20.5 R25 (L-3) XHA2 tires at a pressure of 4.14 bar (60 psi) in the front tires and 2.76 bar (40 psi) in the rear tires.

Bucket Specifications

924K Bucket Selection Table

Bucket Fill Factor			kg/m³	1375	1450	1525	1600	1675	1750	1825	1900	1975	2050	2125	High Lift	
			lb/yd³	2,317	2,443	2,570	2,696	2,822	2,949	3,075	3,202	3,328	3,454	3,581		
		m³	yd³												kg/m³	lb/yd³
General Purpose	Pin On	1.9	2.5							112%	108%	104%	100%	96%	–501	–845
		2.1	2.7				115%	109%	105%	100%	97%				–451	–759
		2.3	3.0		114%	109%	104%	99%	95%						–408	–688
	Fusion	1.9	2.5						112%	107%	103%	99%	95%		–494	–833
		2.1	2.7			115%	109%	104%	100%	96%					–444	–748
		2.3	3.0	115%	109%	104%	99%	94%							–403	–679

Bucket Fill Factor			kg/m³	600	650	700	750	800	850	900	950	1000	1050	1100	High Lift	
			lb/yd³	1,011	1,095	1,180	1,264	1,348	1,432	1,517	1,601	1,685	1,769	1,854		
		m³	yd³												kg/m³	lb/yd³
Light Material	Pin On	3.5	4.6							114%	108%	103%	98%		–262	–442
		4.2	5.5				111%	104%	98%						–214	–360
		5.0	6.5		107%	99%									–181	–305
	Fusion	3.5	4.6							109%	103%	98%			–259	–436
		4.2	5.5			112%	105%	98%							–211	–356
		5.0	6.5	110%	101%										–178	–301

Material density and fill factor are key variables when choosing the appropriate size of the bucket. The long floor and open throat design of the Performance Series Buckets along with the aggressive rack angles of the optimized K Series linkage will demonstrate fill factors greater than 100% ISO rated. Refer to the Fill Factors table for expected fill factor per material density and Bucket Selection Table for bucket sizing.

924K Fill Factors

Materials	Density		Fill %
Earth and rock	~ 1800 kg/m³	~ 3,033 lb/yd³	~ 115%
Sand and gravel	~ 1700 kg/m³	~ 2,865 lb/yd³	~ 110%
Aggregates	~ 1600 kg/m³	~ 2,696 lb/yd³	~ 105%
Bulk grains	~ 750 kg/m³	~ 1,264 lb/yd³	~ 100%
Woodchips	~ 500 kg/m³	~ 843 lb/yd³	~ 100%

924K Ground Engagement Options

	Long Teeth and Segments		Short Teeth and Segments	
Dig depth	+12 mm	+0.5 in	+5 mm	+0.2 in
Length: overall	+146 mm	+5.7 in	+121 mm	+4.8 in
Dump clearance	–103 mm	–4.1 in	–82 mm	–3.2 in
Reach	+104 mm	+4.1 in	+89 mm	+3.5 in
Tipping load – straight	–148 kg	–325 lb	–142 kg	–311 lb
Tipping load – full turn	–145 kg	–318 lb	–139 kg	–305 lb
Breakout force	–121 kg	–266 lb	–115 kg	–254 lb
Operating weight	+120 kg	+264 lb	+116 kg	+255 lb

930K Operating Specifications with Buckets

		General Purpose							
		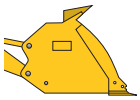 Pin On			Fusion			ISO 23727	
Rated capacity	m^3	2.1	2.3	2.5	2.1	2.3	2.5	2.3	2.5
	yd^3	2.7	3.0	3.3	2.7	3.0	3.3	3.0	3.3
Struck capacity	m^3	1.9	2.1	2.3	1.9	2.1	2.3	2.2	2.4
	yd^3	2.5	2.7	3.0	2.5	2.7	3.0	2.9	3.1
Width: bucket	mm	2550	2550	2550	2550	2550	2550	2550	2750
	ft/in	8'4"	8'4"	8'4"	8'4"	8'4"	8'4"	8'4"	9'0"
Nominal material density, 100% fill factor	kg/m^3	2082	1883	1706	1993	1802	1631	1734	1576
	lb/yd^3	3,568	3,182	2,849	3,416	3,045	2,722	2,929	2,632
Clearance: full lift, 45° dump	mm	2855	2807	2761	2828	2779	2733	2698	2698
	ft/in	9'4"	9'2"	9'0"	9'3"	9'1"	8'11"	8'10"	8'10"
Reach: full lift, 45° dump	mm	1033	1070	1109	1064	1102	1140	1205	1205
	ft/in	3'4"	3'6"	3'7"	3'5"	3'7"	3'8"	3'11"	3'11"
Reach: 2130 mm (7'0") clearance, 45° dump	mm	1560	1573	1587	1578	1590	1603	1648	1648
	ft/in	5'1"	5'1"	5'2"	5'2"	5'2"	5'3"	5'4"	5'4"
Reach: level arm, level bucket	mm	2350	2413	2475	2392	2455	2517	2586	2586
	ft/in	7'8"	7'11"	8'1"	7'10"	8'0"	8'3"	8'5"	8'5"
Dig depth	mm	100	100	100	100	100	100	93	93
	in	3.9"	3.9"	3.9"	3.9"	3.9"	3.9"	3.7"	3.7"
Length: overall	mm	7488	7551	7613	7530	7593	7655	7718	7718
	ft/in	24'6"	24'9"	24'11"	24'8"	24'10"	25'1"	25'3"	25'3"
Height: overall	mm	5122	5180	5239	5147	5205	5264	5294	5294
	ft/in	16'9"	16'11"	17'2"	16'10"	17'0"	17'3"	17'4"	17'4"
Turning radius, bucket at carry	mm	5933	5951	5970	5945	5964	5983	5984	6075
	ft/in	19'5"	19'6"	19'7"	19'6"	19'6"	19'7"	19'7"	19'11"
Tipping load – straight, ISO 14397-1*	kg	10 202	10 114	9976	9803	9718	9571	9349	9252
	lb	22,484	22,290	21,986	21,605	21,418	21,095	20,604	20,391
Tipping load – straight, rigid tire**	kg	10 627	10 535	10 391	10 212	10 123	9970	9738	9637
	lb	23,421	23,219	22,902	22,506	22,310	21,974	21,463	21,240
Tipping load – full turn, ISO 14397-1*	kg	8743	8662	8532	8369	8291	8153	7975	7881
	lb	19,269	19,091	18,805	18,444	18,272	17,968	17,576	17,368
Tipping load – full turn, rigid tire**	kg	9301	9215	9077	8903	8820	8673	8484	8384
	lb	20,499	20,310	20,005	19,621	19,438	19,115	18,698	18,477
Breakout force	kg	12 881	12 158	11 488	12 366	11 693	11 063	10 432	10 375
	lb	28,388	26,796	25,318	27,254	25,772	24,382	22,991	22,867
Operating weight	kg	13 488	13 526	13 625	13 829	13 867	13 978	13 815	13 918
	lb	29,727	29,811	30,029	30,479	30,562	30,808	30,447	30,674

*Full compliance to ISO 14397-1 (2007) Sections 1 through 6, which requires 2% verification between calculation and testing.

**Compliance to ISO 14397-1 (2007) Sections 1 through 5.

Dimensions listed are for a 930K configured with bucket, bolt-on cutting edge, heavy counterweights, additional guarding, 80 kg (176 lb) operator, and Michelin 20.5 R25 (L-3) XHA2 tires at a pressure of 4.14 bar (60 psi) in the front tires and 2.76 bar (40 psi) in the rear tires.

Bucket Specifications

930K Operating Specifications with Buckets

		Light Material						
		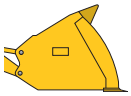 Pin On			Fusion			High Lift
Rated capacity	m^3	3.5	4.2	5.0	3.5	4.2	5.0	–
	yd^3	4.6	5.5	6.5	4.6	5.5	6.5	–
Struck capacity	m^3	3.3	4.0	4.8	3.3	4.0	4.8	–
	yd^3	4.3	5.2	6.3	4.3	5.2	6.3	–
Width: bucket	mm	2750	2750	2750	2750	2750	2750	–
	ft/in	9'0"	9'0"	9'0"	9'0"	9'0"	9'0"	–
Nominal material density, 100% fill factor	kg/m^3	1176	948	793	1123	905	757	–
	lb/yd^3	1972	1,596	1,345	1883	1,523	1,284	–
Clearance: full lift, 45° dump	mm	2629	2509	2509	2600	2479	2479	+593
	ft/in	8'7"	8'2"	8'2"	8'6"	8'1"	8'1"	+1'11"
Reach: full lift, 45° dump	mm	1137	1257	1257	1166	1286	1286	+320
	ft/in	3'8"	4'1"	4'1"	3'9"	4'2"	4'2"	+1'0"
Reach: 2130 mm (7'0") clearance, 45° dump	mm	1538	1579	1579	1549	1588	1588	+717
	ft/in	5'0"	5'2"	5'2"	5'0"	5'2"	5'2"	+2'4"
Reach: level arm, level bucket	mm	2603	2773	2773	2645	2815	2815	+653
	ft/in	8'6"	9'1"	9'1"	8'8"	9'2"	9'2"	+2'1"
Dig depth	mm	100	100	100	100	100	100	+35
	in	3.9"	3.9"	3.9"	3.9"	3.9"	3.9"	+1.4"
Length: overall	mm	7741	7911	7911	7783	7953	7953	+794
	ft/in	25'4"	25'11"	25'11"	25'6"	26'1"	26'1"	+2'7"
Height: overall	mm	5284	5445	5725	5309	5471	5752	+593
	ft/in	17'4"	17'10"	18'9"	17'5"	17'11"	18'10"	+1'11"
Turning radius, bucket at carry	mm	6099	6152	6152	6112	6166	6166	+384
	ft/in	20'0"	20'2"	20'2"	20'0"	20'2"	20'2"	+1'3"
Tipping load – straight, ISO 14397-1*	kg	9652	9365	9334	9259	8977	8948	–2795
	lb	21,273	20,640	20,572	20,406	19,785	19,722	–6,160
Tipping load – straight, rigid tire**	kg	10 054	9755	9723	9645	9351	9321	–2912
	lb	22,159	21,500	21,429	21,256	20,609	20,543	–6,417
Tipping load – full turn, ISO 14397-1*	kg	8230	7966	7934	7860	7602	7571	–2452
	lb	18,138	17,557	17,486	17,323	16,754	16,687	–5,404
Tipping load – full turn, rigid tire**	kg	8755	8475	8440	8362	8087	8055	–2609
	lb	19,296	18,678	18,602	18,429	17,823	17,752	–5,749
Breakout force	kg	10 277	9020	8969	9921	8730	8682	–299
	lb	22,649	19,879	19,767	21,864	19,240	19,134	–658
Operating weight	kg	13 842	13 979	14 049	14 192	14 332	14 397	+247
	lb	30,508	30,810	30,965	31,280	31,587	31,731	+544

*Full compliance to ISO 14397-1 (2007) Sections 1 through 6, which requires 2% verification between calculation and testing.

**Compliance to ISO 14397-1 (2007) Sections 1 through 5.

Dimensions listed are for a 930K configured with bucket, bolt-on cutting edge, heavy counterweights, additional guarding, 80 kg (176 lb) operator, and Michelin 20.5 R25 (L-3) XHA2 tires at a pressure of 4.14 bar (60 psi) in the front tires and 2.76 bar (40 psi) in the rear tires.

930K Bucket Selection Table

Bucket Fill Factor			kg/m³	1375	1450	1525	1600	1675	1750	1825	1900	1975	2050	2125	2200	High Lift	
			lb/yd³	2,317	2,443	2,570	2,696	2,822	2,949	3,075	3,202	3,328	3,454	3,581	3,707		
		m³	yd³													kg/m³	lb/yd³
General Purpose	Pin On	2.1	2.7							114%	110%	105%	102%	98%		–588	–992
		2.3	3.0					112%	108%	103%	99%	95%				–533	–898
		2.5	3.3			112%	107%	102%	98%							–487	–821
	Fusion	2.1	2.7						114%	109%	105%	101%	97%			–580	–977
		2.3	3.0				113%	108%	103%	99%	95%					–525	–885
		2.5	3.3		112%	107%	102%	97%								–480	–809

Bucket Fill Factor			kg/m³	700	750	800	850	900	950	1000	1050	1100	1150	1200	1250	High Lift	
			lb/yd³	1,180	1,264	1,348	1,432	1,517	1,601	1,685	1,769	1,854	1,938	2,022	2,106		
		m³	yd³													kg/m³	lb/yd³
Light Material	Pin On	3.5	4.6								112%	107%	102%	98%	94%	–341	–575
		4.2	5.5				112%	105%	100%	95%						–278	–468
		5.0	6.5	113%	106%	99%										–234	–395
	Fusion	3.5	4.6							112%	107%	102%	98%			–337	–568
		4.2	5.5			113%	106%	101%	95%							–274	–462
		5.0	6.5	108%	101%	95%										–231	–389

Material density and fill factor are key variables when choosing the appropriate size of the bucket. The long floor and open throat design of the Performance Series Buckets along with the aggressive rack angles of the optimized K Series linkage will demonstrate fill factors greater than 100% ISO rated. Refer to the Fill Factors table for expected fill factor per material density and Bucket Selection Table for bucket sizing.

930K Fill Factors

Materials	Density		Fill %
Earth and rock	~ 1800 kg/m³	~ 3,033 lb/yd³	~ 115%
Sand and gravel	~ 1700 kg/m³	~ 2,865 lb/yd³	~ 110%
Aggregates	~ 1600 kg/m³	~ 2,696 lb/yd³	~ 105%
Bulk grains	~ 750 kg/m³	~ 1,264 lb/yd³	~ 100%
Woodchips	~ 500 kg/m³	~ 843 lb/yd³	~ 100%

930K Ground Engagement Options

	Long Teeth and Segments		Short Teeth and Segments	
Dig depth	+11 mm	+0.4 in	+5 mm	+0.2 in
Length: overall	+146 mm	+5.7 in	+121 mm	+4.8 in
Dump clearance	–104 mm	–4.1 in	–83 mm	–3.3 in
Reach	+103 mm	+4.1 in	+88 mm	+3.5 in
Tipping load – straight	–150 kg	–329 lb	–143 kg	–315 lb
Tipping load – full turn	–146 kg	–322 lb	–140 kg	–309 lb
Breakout force	–121 kg	–266 lb	–115 kg	–254 lb
Operating weight	+120 kg	+264 lb	+116 kg	+255 lb

Bucket Specifications

938K Operating Specifications with Buckets

		General Purpose							
		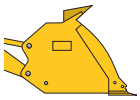 Pin On			Fusion			ISO 23727	
Rated capacity	m^3	2.5	2.7	2.9	2.5	2.7	2.9	2.7	2.9
	yd^3	3.3	3.5	3.8	3.3	3.5	3.8	3.5	3.8
Struck capacity	m^3	2.3	2.5	2.7	2.3	2.5	2.7	2.6	2.7
	yd^3	3.0	3.3	3.5	3.0	3.3	3.5	3.4	3.5
Width: bucket	mm	2750	2750	2750	2750	2750	2750	2750	2750
	ft/in	9'0"	9'0"	9'0"	9'0"	9'0"	9'0"	9'0"	9'0"
Nominal material density, 100% fill factor	kg/m^3	1998	1834	1694	1905	1748	1615	1696	1567
	lb/yd^3	3,337	3,118	2,850	3,181	2,972	2,716	2,883	2,636
Clearance: full lift, 45° dump	mm	2869	2822	2786	2834	2787	2751	2712	2675
	ft/in	9'4"	9'3"	9'1"	9'3"	9'1"	9'0"	8'10"	8'9"
Reach: full lift, 45° dump	mm	1108	1146	1178	1146	1185	1216	1280	1311
	ft/in	3'7"	3'9"	3'10"	3'9"	3'10"	3'11"	4'2"	4'3"
Reach: 2130 mm (7'0") clearance, 45° dump	mm	1637	1652	1664	1658	1672	1684	1726	1735
	ft/in	5'4"	5'5"	5'5"	5'5"	5'5"	5'6"	5'7"	5'8"
Reach: level arm, level bucket	mm	2452	2514	2563	2504	2566	2615	2687	2736
	ft/in	8'0"	8'2"	8'4"	8'2"	8'5"	8'6"	8'9"	8'11"
Dig depth	mm	100	100	100	101	101	101	93	93
	in	3.9"	3.9"	3.9"	4"	4"	4"	3.7"	3.7"
Length: overall	mm	7604	7666	7715	7656	7718	7767	7833	7882
	ft/in	24'11"	25'1"	25'3"	25'1"	25'3"	25'5"	25'8"	25'10"
Height: overall	mm	5242	5301	5348	5273	5332	5379	5415	5462
	ft/in	17'2"	17'4"	17'6"	17'3"	17'5"	17'7"	17'9"	17'11"
Turning radius, bucket at carry	mm	6117	6136	6150	6133	6152	6166	6169	6185
	ft/in	20'0"	20'1"	20'2"	20'1"	20'2"	20'2"	20'2"	20'3"
Tipping load – straight, ISO 14397-1*	kg	11 707	11 610	11 529	11 209	11 113	11 035	10 775	10 702
	lb	25,801	25,588	25,408	24,704	24,493	24,320	23,748	23,587
Tipping load – straight, rigid tire**	kg	12 194	12 094	12 009	11 676	11 576	11 494	11 224	11 148
	lb	26,876	26,654	26,467	25,734	25,514	25,333	24,737	24,570
Tipping load – full turn, ISO 14397-1*	kg	9991	9903	9828	9527	9439	9367	9156	9089
	lb	22,021	21,825	21,661	20,997	20,803	20,645	20,180	20,033
Tipping load – full turn, rigid tire**	kg	10 629	10 535	10 455	10 135	10 042	9965	9741	9670
	lb	23,426	23,218	23,043	22,337	22,131	21,963	21,468	21,311
Breakout force	kg	13 813	13 082	12 552	13 170	12 498	12 009	11 299	10 887
	lb	30,442	28,833	27,665	29,027	27,546	26,467	24,902	23,993
Operating weight	kg	15 523	15 568	15 604	15 928	15 972	16 008	15 858	15 892
	lb	34,212	34,311	34,392	35,104	35,202	35,281	34,950	35,025

*Full compliance to ISO 14397-1 (2007) Sections 1 through 6, which requires 2% verification between calculation and testing.

**Compliance to ISO 14397-1 (2007) Sections 1 through 5.

Dimensions listed are for a 938K configured with bucket, bolt-on cutting edge, heavy counterweights, additional guarding, 80 kg (176 lb) operator, and Michelin 20.5 R25 (L-3) XHA2 tires at a pressure of 4.48 bar (65 psi) in the front tires and 2.76 bar (40 psi) in the rear tires.

938K Operating Specifications with Buckets

		Light Material						
		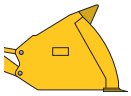 Pin On			Fusion			High Lift
Rated capacity	m^3	3.5	4.2	5.0	3.5	4.2	5.0	–
	yd^3	4.6	5.5	6.5	4.6	5.5	6.5	–
Struck capacity	m^3	3.3	4.0	4.8	3.3	4.0	4.8	–
	yd^3	4.3	5.2	6.3	4.3	5.2	6.3	–
Width: bucket	mm	2750	2750	2750	2750	2750	2750	–
	ft/in	9'0"	9'0"	9'0"	9'0"	9'0"	9'0"	–
Nominal material density, 100% fill factor	kg/m^3	1378	1114	934	1313	1062	890	–
	lb/yd^3	2311	1,875	1,583	2202	1,787	1,508	–
Clearance: full lift, 45° dump	mm	2691	2571	2571	2654	2534	2534	+581
	ft/in	8'9"	8'5"	8'5"	8'8"	8'3"	8'3"	+1'10"
Reach: full lift, 45° dump	mm	1174	1294	1294	1210	1331	1331	+267
	ft/in	3'10"	4'2"	4'2"	3'11"	4'4"	4'4"	+11"
Reach: 2130 mm (7'0") clearance, 45° dump	mm	1608	1654	1654	1622	1666	1666	+666
	ft/in	5'3"	5'5"	5'5"	5'3"	5'5"	5'5"	+2'2"
Reach: level arm, level bucket	mm	2642	2812	2812	2694	2864	2864	+607
	ft/in	8'8"	9'2"	9'2"	8'10"	9'4"	9'4"	+1'11"
Dig depth	mm	100	100	100	101	101	101	+35
	in	3.9"	3.9"	3.9"	4"	4"	4"	+1.4"
Length: overall	mm	7794	7964	7964	7846	8016	8016	+740
	ft/in	25'6"	26'1"	26'1"	25'8"	26'3"	26'3"	+2'5"
Height: overall	mm	5346	5507	5786	5376	5539	5820	+581
	ft/in	17'6"	18'0"	18'11"	17'7"	18'2"	19'1"	+1'10"
Turning radius, bucket at carry	mm	6174	6227	6227	6190	6244	6244	+357
	ft/in	20'3"	20'5"	20'5"	20'3"	20'5"	20'5"	+1'2"
Tipping load – straight, ISO 14397-1*	kg	11 332	11 018	11 001	10 847	10 549	10 526	–3003
	lb	24,975	24,282	24,247	23,907	23,249	23,198	–6,618
Tipping load – straight, rigid tire**	kg	11 804	11 477	11 460	11 299	10 988	10 964	–3128
	lb	26,016	25,294	25,257	24,903	24,217	24,164	–6,893
Tipping load – full turn, ISO 14397-1*	kg	9646	9359	9340	9194	8921	8895	–2625
	lb	21,259	20,626	20,584	20,262	19,662	19,605	–5,785
Tipping load – full turn, rigid tire**	kg	10 262	9956	9936	9780	9491	9463	–2793
	lb	22,616	21,943	21,898	21,556	20,917	20,856	–6,154
Breakout force	kg	11 750	10 331	10 281	11 263	9936	9888	–502
	lb	25,897	22,768	22,659	24,822	21,899	21,792	–1,106
Operating weight	kg	15 730	15 869	15 937	16 131	16 270	16 335	+249
	lb	34,668	34,975	35,124	35,551	35,859	36,002	+549

*Full compliance to ISO 14397-1 (2007) Sections 1 through 6, which requires 2% verification between calculation and testing.

**Compliance to ISO 14397-1 (2007) Sections 1 through 5.

Dimensions listed are for a 938K configured with bucket, bolt-on cutting edge, heavy counterweights, additional guarding, 80 kg (176 lb) operator, and Michelin 20.5 R25 (L-3) XHA2 tires at a pressure of 4.48 bar (65 psi) in the front tires and 2.76 bar (40 psi) in the rear tires.

Bucket Specifications

938K Bucket Selection Table

Bucket Fill Factor			kg/m³	1375	1450	1525	1600	1675	1750	1825	1900	1975	2050	2125	High Lift	
			lb/yd³	2,317	2,443	2,570	2,696	2,822	2,949	3,075	3,202	3,328	3,454	3,581		
		m³	yd³												kg/m³	lb/yd³
General Purpose	Pin On	2.5	3.3						114%	109%	105%	101%	97%	94%	–529	–891
		2.7	3.5				115%	109%	105%	100%	97%				–486	–819
		2.9	3.8			111%	106%	101%	97%						–450	–758
	Fusion	2.5	3.3					114%	109%	104%	100%	96%			–519	–874
		2.7	3.5			115%	109%	104%	100%	96%					–477	–804
		2.9	3.8		111%	106%	101%	96%							–441	–744

Bucket Fill Factor			kg/m³	800	850	900	950	1000	1050	1100	1150	1250	1350	1450	High Lift	
			lb/yd³	1,348	1,432	1,517	1,601	1,685	1,769	1,854	1,938	2,106	2,275	2,443		
		m³	yd³												kg/m³	lb/yd³
Light Material	Pin On	3.5	4.6									110%	102%	95%	–369	–621
		4.2	5.5					111%	106%	101%	97%				–300	–506
		5.0	6.5		110%	104%	98%								–254	–427
	Fusion	3.5	4.6								114%	105%	97%		–362	–610
		4.2	5.5				112%	106%	101%	97%					–295	–497
		5.0	6.5	111%	105%	99%									–249	–420

Material density and fill factor are key variables when choosing the appropriate size of the bucket. The long floor and open throat design of the Performance Series Buckets along with the aggressive rack angles of the optimized K Series linkage will demonstrate fill factors greater than 100% ISO rated. Refer to the Fill Factors table for expected fill factor per material density and Bucket Selection Table for bucket sizing.

938K Fill Factors

Materials	Density		Fill %
Earth and rock	~ 1800 kg/m³	~ 3,033 lb/yd³	~ 115%
Sand and gravel	~ 1700 kg/m³	~ 2,865 lb/yd³	~ 110%
Aggregates	~ 1600 kg/m³	~ 2,696 lb/yd³	~ 105%
Bulk grains	~ 750 kg/m³	~ 1,264 lb/yd³	~ 100%
Woodchips	~ 500 kg/m³	~ 843 lb/yd³	~ 100%

938K Ground Engagement Options

	Long Teeth and Segments		Short Teeth and Segments	
Dig depth	+11 mm	+0.4 in	+5 mm	+0.2 in
Length: overall	+146 mm	+5.7 in	+121 mm	+4.8 in
Dump clearance	–105 mm	–4.1 in	–84 mm	–3.3 in
Reach	+102 mm	+4 in	+87 mm	+3.4 in
Tipping load – straight	–138 kg	–305 lb	–132 kg	–291 lb
Tipping load – full turn	–136 kg	–298 lb	–130 kg	–285 lb
Breakout force	–112 kg	–245 lb	–106 kg	–234 lb
Operating weight	+111 kg	+244 lb	+106 kg	+233 lb

Operating Specifications with Pallet Forks

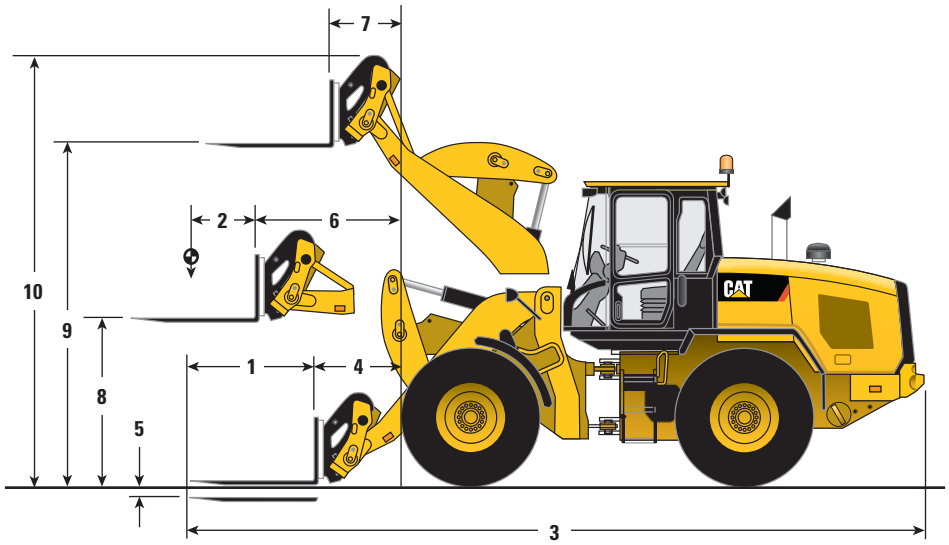

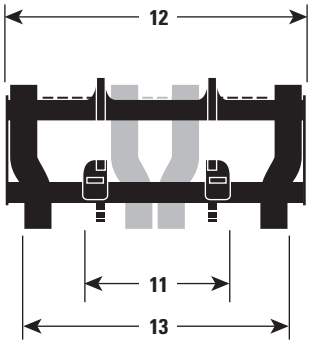

	Pallet Fork – Fusion					
	924K		930K		938K	
1 Fork tine length	1220 mm	4'0"	1220 mm	4'0"	1220 mm	4'0"
2 Load center	610 mm	2'0"	610 mm	2'0"	610 mm	2'0"
3 Length: overall	7875 mm	25'10"	7882 mm	25'10"	7942 mm	26'0"
4 Reach: ground	926 mm	3'0"	926 mm	3'0"	961 mm	3'1"
5 Dig depth	47 mm	1.9"	47 mm	1.9"	44 mm	1.7"
6 Reach: level arm	1569 mm	5'1"	1569 mm	5'1"	1617 mm	5'3"
7 Reach: full lift	767 mm	2'6"	767 mm	2'6"	814 mm	2'8"
8 Clearance: level arm	1792 mm	5'10"	1792 mm	5'10"	1830 mm	6'0"
9 Clearance: full lift	3693 mm	12'1"	3693 mm	12'1"	3758 mm	12'3"
10 Height: overall	4676 mm	15'4"	4676 mm	15'4"	4740 mm	15'6"
Tipping load – straight, ISO 14397-1*	6650 kg	14,657 lb	7586 kg	16,720 lb	8811 kg	19,420 lb
Tipping load – full turn, ISO 14397-1*	5729 kg	12,626 lb	6502 kg	14,330 lb	7530 kg	16,595 lb
Operating weight	12 577 kg	27,719 lb	13 494 kg	29,741 lb	15 432 kg	34,012 lb
Rated load % of full turn tip:						
50% of tip: SAE J1197**	2864 kg	6,313 lb	3251 kg	7,165 lb	3765 kg	8,297 lb
60% of tip: rough terrain EN474-3**	3437 kg	7,575 lb	3901 kg	8,598 lb	4518 kg	9,957 lb
80% of tip: firm and level EN474-3**	4583 kg	10,100 lb	5202 kg	11,464 lb	6024 kg	13,276 lb
11 Minimum fork spacing	300 mm	11"	300 mm	11"	300 mm	11"
12 Carriage width	1566 mm	5'1"	1566 mm	5'1"	1566 mm	5'1"
13 Maximum fork spacing	1550 mm	5'1"	1550 mm	5'1"	1550 mm	5'1"

*Full compliance to ISO 14397-1 (2007) Sections 1 through 6, which requires 2% verification between calculation and testing.

**Full compliance to EN474-3 and SAE J1197.

Dimensions listed are for a machine configured with Fusion work tool, counterweights, additional guarding, 80 kg (176 lb) operator, and Michelin 20.5 R25 (L-3) XHA2 tires.

Operating Specifications with Construction Forks

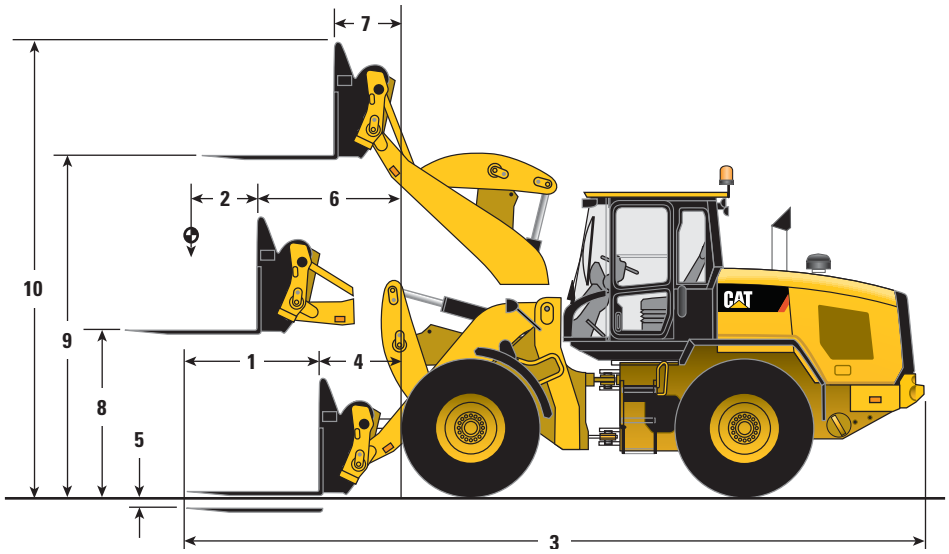

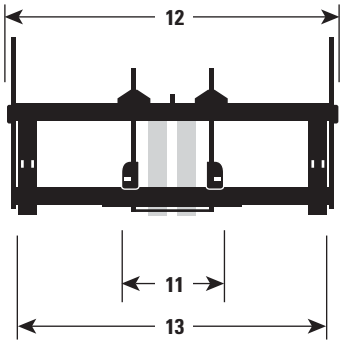

	Construction Fork – Fusion					
	924K		930K		938K	
1 Fork tine length	1524 mm	5'0"	1524 mm	5'0"	1524 mm	5'0"
2 Load center	762 mm	2'6"	762 mm	2'6"	762 mm	2'6"
3 Length: overall	8298 mm	27'2"	8305 mm	27'2"	8366 mm	27'5"
4 Reach: ground	1045 mm	3'5"	1045 mm	3'5"	1081 mm	3'6"
5 Dig depth	–120 mm	–4.7"	–120 mm	–4.7"	–119 mm	–4.7"
6 Reach: level arm	1627 mm	5'4"	1627 mm	5'4"	1675 mm	5'5"
7 Reach: full lift	825 mm	2'8"	825 mm	2'8"	872 mm	2'10"
8 Clearance: level arm	1729 mm	5'8"	1729 mm	5'8"	1766 mm	5'9"
9 Clearance: full lift	3630 mm	11'10"	3630 mm	11'10"	3693 mm	12'1"
10 Height: overall	4935 mm	16'2"	4935 mm	16'2"	0 mm	0"
Tipping load – straight, ISO 14397-1*	5951 kg	13,115 lb	6824 kg	15,039 lb	7973 kg	17,571 lb
Tipping load – full turn, ISO 14397-1*	5096 kg	11,231 lb	5817 kg	12,821 lb	6781 kg	14,945 lb
Operating weight	12 911 kg	28,456 lb	13 829 kg	30,478 lb	15 767 kg	34,749 lb
Rated load % of full turn tip:						
50% of tip: SAE J1197**	2548 kg	5,615 lb	2909 kg	6,410 lb	3391 kg	7,472 lb
60% of tip: rough terrain EN474-3**	3058 kg	6,738 lb	3490 kg	7,692 lb	4069 kg	8,967 lb
80% of tip: firm and level EN474-3**	4077 kg	8,985 lb	4654 kg	10,256 lb	5425 kg	11,956 lb
11 Minimum fork spacing	300 mm	11"	300 mm	11"	300 mm	11"
12 Carriage width	2498 mm	8'2"	2498 mm	8'2"	2498 mm	8'2"
13 Maximum fork spacing	2375 mm	7'9"	2375 mm	7'9"	2375 mm	7'9"

*Full compliance to ISO 14397-1 (2007) Sections 1 through 6, which requires 2% verification between calculation and testing.

**Full compliance to EN474-3 and SAE J1197.

Dimensions listed are for a machine configured with Fusion work tool, counterweights, additional guarding, 80 kg (176 lb) operator, and Michelin 20.5 R25 (L-3) XHA2 tires.

Operating Specifications with Material Handling Arm

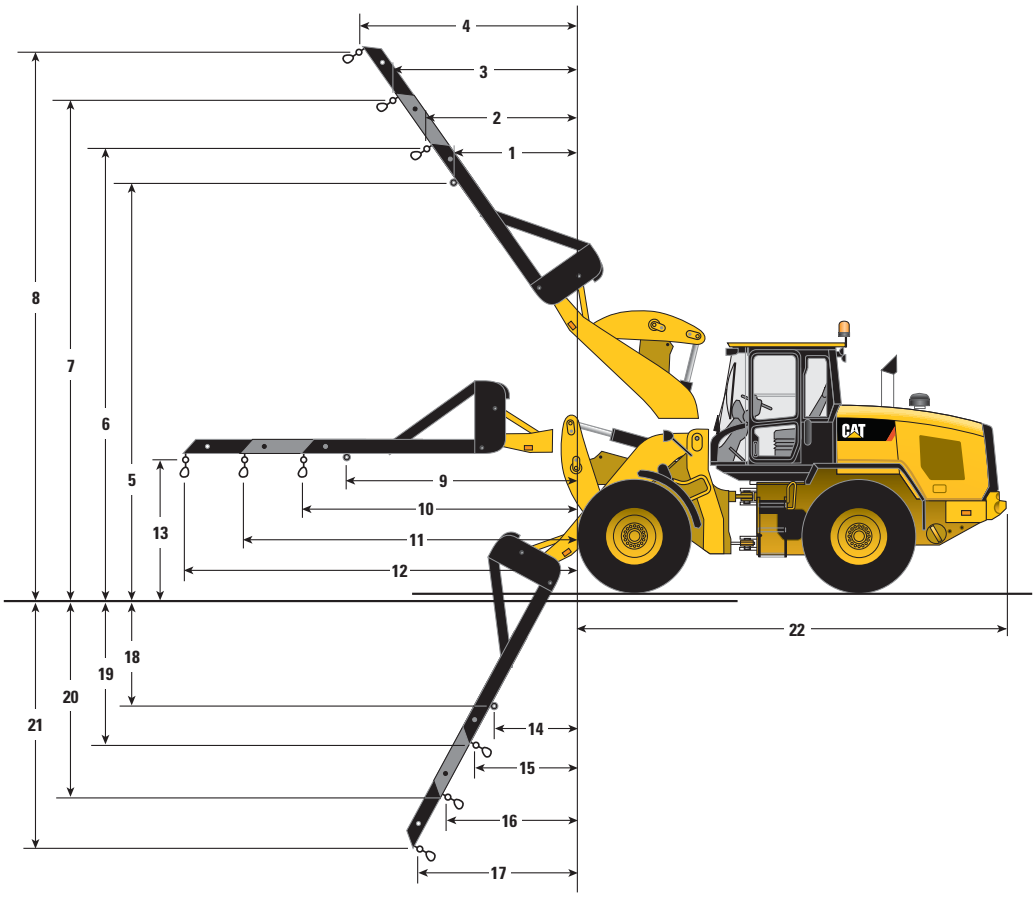

Material Handling Arm – Fusion

	924K		930K		938K			924K		930K		938K	
1	2113 mm	6'11"	2113 mm	6'11"	2144 mm	7'0"	**12**	5327 mm	17'5"	5327 mm	17'5"	5376 mm	17'7"
2	2333 mm	7'7"	2333 mm	7'7"	2362 mm	7'8"	**13**	1854 mm	6'0"	1854 mm	6'0"	1890 mm	6'2"
3	2919 mm	9'6"	2919 mm	9'6"	2943 mm	9'7"	**14**	863 mm	2'9"	863 mm	2'9"	906 mm	2'11"
4	3505 mm	11'6"	3505 mm	11'6"	3525 mm	11'6"	**15**	1045 mm	3'5"	1045 mm	3'5"	1089 mm	3'6"
5	5257 mm	17'2"	5257 mm	17'2"	5343 mm	17'6"	**16**	1276 mm	4'2"	1276 mm	4'2"	1324 mm	4'4"
6	5568 mm	18'3"	5568 mm	18'3"	5655 mm	18'6"	**17**	1507 mm	4'11"	1507 mm	4'11"	1559 mm	5'1"
7	6112 mm	20'0"	6112 mm	20'0"	6204 mm	20'4"	**18**	1975 mm	6'5"	1975 mm	6'5"	1983 mm	6'6"
8	6657 mm	21'10"	6657 mm	21'10"	6754 mm	22'1"	**19**	2310 mm	7'6"	2310 mm	7'6"	2316 mm	7'7"
9	3354 mm	11'0"	3354 mm	11'0"	3403 mm	11'1"	**20**	3076 mm	10'1"	3076 mm	10'1"	3081 mm	10'1"
10	3727 mm	12'2"	3727 mm	12'2"	3775 mm	12'4"	**21**	3842 mm	12'7"	3842 mm	12'7"	3846 mm	12'7"
11	4527 mm	14'10"	4527 mm	14'10"	4575 mm	15'0"	**22**	5730 mm	18'9"	5737 mm	18'9"	5762 mm	18'10"

Operating weight	12 444 kg	27,426 lb	13 361 kg	29,447 lb	15 244 kg	33,597 lb
Rated load (50% of full turn tip, SAE J1197*)						
Fixed tab (9)	2053 kg	4,525 lb	2329 kg	5,133 lb	2705 kg	5,962 lb
Minimum extension (10)	1882 kg	4,148 lb	2135 kg	4,705 lb	2482 kg	5,470 lb
Middle extension (11)	1597 kg	3,518 lb	1811 kg	3,991 lb	2109 kg	4,647 lb
Maximum extension (12)	1386 kg	3,055 lb	1572 kg	3,465 lb	1833 kg	4,040 lb

*Full compliance to EN474-3 and SAE J1197.

Operating Specifications with High Dump Buckets

			Pin On			Fusion			ISO 23727			High Lift		
			924K	930K	938K	924K	930K	938K	924K	930K	938K	924K	930K	938K
	Rated capacity	m^3	3.0	3.5	4.1	3.0	3.5	4.1	3.0	3.5	4.1	–	–	–
		yd^3	3.9	4.6	5.4	3.9	4.6	5.4	3.9	4.6	5.4	–	–	–
	Struck capacity	m^3	2.9	3.3	3.9	2.9	3.3	3.9	2.9	3.3	3.9	–	–	–
		yd^3	3.8	4.3	5.1	3.8	4.3	5.1	3.8	4.3	5.1	–	–	–
	Bucket width	mm	2550	2550	2750	2550	2550	2750	2550	2550	2750	–	–	–
		ft/in	8'4"	8'4"	9'0"	8'4"	8'4"	9'0"	8'4"	8'4"	9'0"	–	–	–
	Nominal material density, 100% fill factor	kg/m^3	1050	1015	1006	1020	992	976	980	953	947	–	–	–
		lb/yd^3	1,780	1,702	1,684	1,730	1,663	1,634	1,662	1,598	1,585	–	–	–
1	Length: overall	mm	7948	8005	8107	7979	8036	8149	8145	8202	8305	+642	+793	+740
		ft/in	26'0"	26'3"	26'7"	26'2"	26'4"	26'8"	26'8"	26'10"	27'2"	+2'1"	+2'7"	+2'5"
2	Dump clearance: full lift, rolled out	mm	4255	4216	4248	4328	4291	4333	4496	4459	4494	+439	+567	+545
		ft/in	13'11"	13'9"	13'11"	14'2"	14'0"	14'2"	14'9"	14'7"	14'8"	+1'5"	+1'10"	+1'9"
3	Clearance: level bucket	mm	4598	4598	4668	4662	4662	4740	4825	4825	4895	+448	+572	+553
		ft/in	15'1"	15'1"	15'3"	15'3"	15'3"	15'6"	15'9"	15'9"	16'0"	+1'5"	+1'10"	+1'9"
4	Height: overall	mm	6184	6226	6295	6248	6290	6367	6411	6453	6523	+448	+572	+553
		ft/in	20'3"	20'5"	20'7"	20'5"	20'7"	20'10"	21'0"	21'2"	21'4"	+1'5"	+1'10"	+1'9"
5	Reach: full lift, rolled out	mm	1451	1482	1548	1453	1486	1559	1538	1571	1637	+252	+327	+275
		ft/in	4'9"	4'10"	5'0"	4'9"	4'10"	5'1"	5'0"	5'1"	5'4"	+9"	+1'0"	+10"
6	Dig depth	mm	100	100	101	100	100	101	92	92	92	+35	+35	+35
		in	3.9"	3.9"	4"	3.9"	3.9"	4"	3.6"	3.6"	3.6"	+1.4"	+1.4"	+1.4"
	Turning radius, bucket at carry	mm	6096	6113	6293	6087	6104	6286	6118	6136	6315	+333	+405	+378
		ft/in	19'11"	20'0"	20'7"	19'11"	20'0"	20'7"	20'0"	20'1"	20'8"	+1'1"	+1'3"	+1'2"
7	Maximum dump angle	deg	52	52	51	49	49	49	48	48	50	–	–	–
8	Rack angle at carry	deg	43	43	43	45	45	45	43	43	43	–	–	–
	Tipping load – straight, ISO 14397-1*	kg	7408	8405	9792	7235	8246	9545	6957	7932	9257	–1830	–2376	–2571
		lb	16,326	18,525	21,582	15,945	18,175	21,036	15,332	17,481	20,401	–4,032	–5,235	–5,666
	Tipping load – straight, rigid tire**	kg	7716	8755	10 200	7536	8590	9942	7247	8262	9642	–1906	–2474	–2678
		lb	17,006	19,296	22,481	16,609	18,932	21,912	15,971	18,210	21,251	–4,200	–5,453	–5,902
	Tipping load – full turn, ISO 14397-1*	kg	6299	7107	8253	6122	6941	8007	5883	6672	7766	–1617	–2088	–2250
		lb	13,882	15,662	18,189	13,492	15,299	17,647	12,965	14,705	17,115	–3,562	–4,601	–4,959
	Tipping load – full turn, rigid tire**	kg	6701	7560	8780	6513	7385	8518	6258	7098	8262	–1720	–2221	–2394
		lb	14,768	16,662	19,350	14,353	16,275	18,774	13,793	15,644	18,208	–3,790	–4,895	–5,275
	Breakout force	kg	6509	8225	9066	6420	8126	8895	5657	7220	7988	–374	–225	–393
		lb	14,346	18,128	19,980	14,149	17,909	19,604	12,467	15,913	17,605	–824	–496	–865
	Operating weight	kg	13 258	14 281	16 252	13 602	14 625	16 648	13 540	14 564	16 537	+299	+247	+249
		lb	29,220	31,474	35,820	29,978	32,232	36,691	29,842	32,098	36,448	+659	+544	+549

*Full compliance to ISO 14397-1 (2007) Sections 1 through 6, which requires 2% verification between calculation and testing.

**Compliance to ISO 14397-1 (2007) Sections 1 through 5.

Dimensions listed are for a machine configured with rollout bucket, counterweights, additional guarding, 80 kg (176 lb) operator, and Michelin 20.5 R25 (L-3) XHA2 tires.

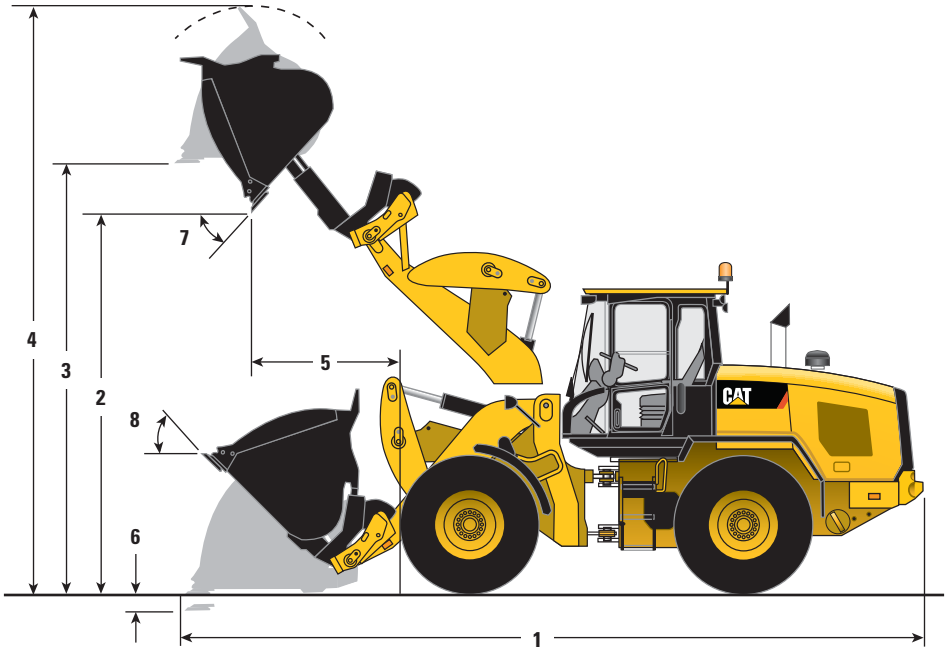

Bucket Selection Table for High Dump Buckets

Bucket Fill Factor			kg/m³	650	725	800	875	950	1025	1100	1175	1250	1325	1400	High Lift	
			lb/yd³	1,095	1,222	1,348	1,474	1,601	1,727	1,854	1,980	2,106	2,233	2,359		
		m³	yd³												kg/m³	lb/yd³
Pin On	924K	3.0	3.9					109%	101%						–265	–447
		3.5	4.6			109%	100%								–226	–380
		4.1	5.4	112%	100%										–191	–322
	930K	3.0	3.9							108%	101%	95%			–345	–582
		3.5	4.6				115%	106%	98%						–293	–494
		4.1	5.4			105%	96%								–248	–418
	938K	4.1	5.4				114%	105%	97%						–269	–452
Fusion	924K	3.0	3.9				115%	106%	98%						–271	–457
		3.5	4.6			106%	97%								–231	–390
		4.1	5.4	109%	98%										–196	–330
	930K	3.0	3.9						113%	106%	99%				–353	–594
		3.5	4.6				112%	103%	96%						–300	–506
		4.1	5.4		113%	103%	94%								–254	–428
	938K	3.0	3.9									110%	103%	98%	–380	–640
		3.5	4.6						113%	106%	99%				–324	–545
		4.1	5.4				111%	103%	95%						–274	–462

Operating Specifications with Multi-Purpose Bucket

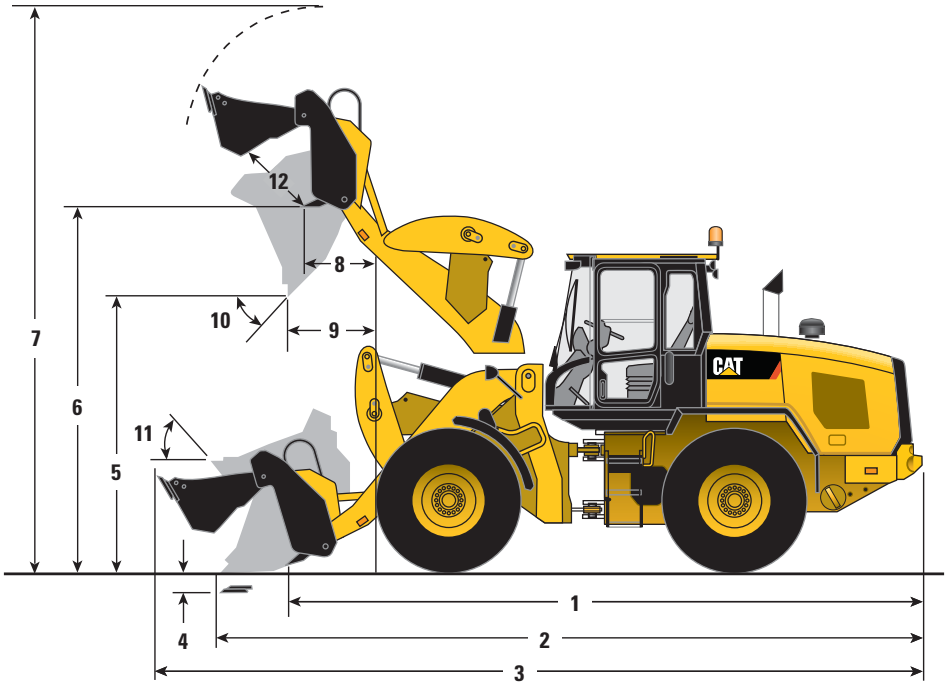

	Multi Purpose – Fusion					
	924K		930K		938K	
Rated capacity	2.1 m³	2.7 yd³	2.1 m³	2.7 yd³	2.1 m³	2.7 yd³
Struck capacity	2.0 m³	2.6 yd³	2.0 m³	2.6 yd³	2.0 m³	2.6 yd³
1 Length – dozer edge to bumper	6744 mm	22'1"	6751 mm	22'1"	6815 mm	22'4"
2 Length: overall – closed clam	7455 mm	24'5"	7462 mm	24'5"	7525 mm	24'8"
3 Length: overall – open clam	8104 mm	26'7"	8111 mm	26'7"	8175 mm	26'9"
4 Dig depth	100 mm	3"	100 mm	3"	101 mm	3"
5 Clearance: full lift, 45° dump	2962 mm	9'8"	2962 mm	9'8"	3017 mm	9'10"
6 Clearance: full lift – open clam	3577 mm	11'8"	3577 mm	11'8"	3638 mm	11'11"
7 Height: overall	5791 mm	18'11"	5791 mm	18'11"	5864 mm	19'2"
8 Reach: full lift – open clam	809 mm	2'7"	809 mm	2'7"	857 mm	2'9"
9 Reach: full lift, 45° dump	1130 mm	3'8"	1130 mm	3'8"	1176 mm	3'10"
10 Maximum dump angle	56°		56°		56°	
11 Rack angle at carry	45°		45°		45°	
12 Clam open distance	995 mm	3'3"	995 mm	3'3"	995 mm	3'3"
13 Bucket width	2550 mm	8'4"	2550 mm	8'4"	2550 mm	8'4"
Turning radius – bucket at carry	5925 mm	19'5"	5925 mm	19'5"	6004 mm	19'8"
Tipping load – straight, ISO 14397-1*	8071 kg	17,787 lb	9317 kg	20,534 lb	10 920 kg	24,068 lb
Tipping load – full turn, ISO 14397-1*	6860 kg	15,119 lb	7890 kg	17,388 lb	9234 kg	20,351 lb
Breakout force	9870 kg	21,752 lb	12 864 kg	28,352 lb	14 567 kg	32,105 lb
Operating weight	13 409 kg	29,554 lb	14 326 kg	31,575 lb	16 209 kg	35,724 lb

*Full compliance to ISO 14397-1 (2007) Sections 1 through 6, which requires 2% verification between calculation and testing.

Dimensions listed are for a machine configured with Fusion work tool, counterweights, additional guarding, 80 kg (176 lb) operator, and Michelin 20.5 R25 (L-3) XHA2 tires.

Optional Equipment

	924K				930K				938K			
	Operating weight		Tipping load – full turn with 1.9 m³ (2.5 yd³) Fusion bucket		Operating weight		Tipping load – full turn with 2.1 m³ (2.75 yd³) Fusion bucket		Operating weight		Tipping load – full turn with 2.5 m³ (3.25 yd³) Fusion bucket	
Change with options removed:	**kg**	**lb**	**kg**	**lb**	**kg**	**lb**	**kg**	**lb**	**kg**	**lb**	**kg**	**lb**
Optional counterweight	0	0	0	0	–320	–705	–502	–1,106	–320	–705	–593	–1,306
Guard, crankcase	–11	–23	–16	–34	–11	–23	–13	–29	–11	–24	–17	–36
Guard, power train lower	–77	–170	–77	–168	–77	–170	–69	–151	–68	–150	–67	–146
Guard, driveshaft	–44	–96	–12	–26	–44	–96	–12	–26	–45	–100	–12	–27
Roading fenders	–18	–38	–28	–61	–18	–38	–24	–52	–18	–38	–28	–60
Secondary steer	–69	–151	–75	–164	–69	–151	–73	–161	–69	–151	–74	–162
Ride control	–49	–107	–27	–59	–49	–107	–26	–57	–49	–107	–27	–59
Change with options added:												
Guard, front window	+34	+74	+17	+37	+34	+74	+18	+39	+34	+74	+18	+39
Guard, rear waste gate	+276	+608	+596	+1,313	+276	+608	+488	+1,075	+276	+608	+581	+1,280
Guard, power train side	+11	+24	+10	+22	+11	+24	+9	+19	+11	+24	+10	+22
Cold start package	+54	+119	+104	+229	+54	+119	+74	+163	+54	+119	+101	+222
Optional tool box	+44	+96	+37	+81	+44	+96	+25	+55	+44	+96	+36	+79
Logger counterweight	+400	+881	+661	+1,456	+400	+881	+557	+1,227	+400	+881	+645	+1,421

924K, 930K, 938K Standard Equipment

Standard equipment may vary. Consult your Cat dealer for details.

POWER TRAIN
- Axle seal guards
- Auto idle shut down feature
- Brake/decelerator pedal
- Cat C6.6 ACERT™ engine
  - Tier 4 Interim/Stage IIIB compliant
  - Turbocharged and aftercooled
  - Filtered crankcase breather
  - Diesel particulate filter
- Coolant protection to –34° C (–29° F)
- Differential lock in front axle
- Differential rear open
- Dry type air cleaner
- Enclosed wet disc full hydraulic brakes
- Fuel priming pump, automatic
- Fuel water separator
- Hydraulically driven demand cooling fan
- Hydrostatic transmission with electronic speed range control
  - 4 speed ranges
  - Rimpull control
  - Creeper control
- Lubed for life driveshafts
- Parking brake, electric
- Single plane cooling system with remote coolant reservoir
- S·O·S℠ port, engine, coolant and transmission oil
- Thermal starting aid (glow plugs)
- Throttle lock
- Transmission directional control on implement joystick
- Transmission sight gauge
- Transmission oil cooler (938K only)

HYDRAULICS
- Heavy duty hydraulic cooler
- Hydraulic diagnostic connectors and S·O·S℠ ports
- Hydraulic sight gauge, visible
- Load sensing hydraulics and steering
- Seat-mounted hydraulic controls with F/N/R

ELECTRICAL
- Alternator, 115-amp, heavy duty
- 12V power supply in cab (2)
- Batteries, 1,000 CCA (2)
- 24 volt system
- Back-up alarm
- Battery disconnect switch
- Beacon ready
- Diagnostic connector
- Directional signals front and rear
- Emergency shutdown switch
- Halogen work lights front and rear
- Heavy duty gear reduction starter
- LED rear stop tail turn lights
- Remote jump start post
- Resettable main and critical function breakers
- Roading lights front and rear

OPERATOR ENVIRONMENT
- 75 mm (3 in) retractable seatbelt
- Automatic temperature control
- Cab, enclosed ROPS/FOPS pressurized and sound suppressed
- Cup holder
- External heated mirrors
- Ground level cab door release
- Gauges
  - Digital direction indicator
  - Digital hour meter and odometer
  - Digital speedometer
  - Engine coolant temperature gauge
  - Fuel level indicator
  - Hydraulic oil temperature gauge
  - Tachometer
- Hydraulic control lockout
- Interior cab lighting, door and dome
- Interior rearview mirrors (2)
- Lunch box storage
- Operator warning system indicators
- Radio ready speakers
- Rear window defrost, electric
- Removable floormat
- Seat-mounted electronic implement controls, adjustable
- Sliding glass on the side windows
- Steering column mounted multi function control – lights, wipers, turn signal
- Suspension seat, fabric
- Tilt and telescopic steering wheel
- Tinted front glass
- Wet arm wiper/washer, 2-speed and intermittent, front
- Wet arm wiper/washer, rear

OTHER STANDARD EQUIPMENT
- Automatic bucket/fork positioner, adjustable in-cab
- Automatic lift and bucket kickouts, adjustable in-cab
- Fenders
- Large-access enclosure doors with adjustable close/open force
- Parallel lift loader linkage with sealed pins
- Recovery hitch with pin
- Remote mounted lubrication points
- Toolbox, lockable
- Vandalism protection – lockable compartments

EU STANDARD EQUIPMENT
- Deluxe cab
- Secondary display
- Rearview camera

NOTE: Not all features are available in all regions. See your Cat dealer for more information.